MIAMIBEACH

BUILDING DEPARTMENT

1700 Convention Center Drive, 2nd Floor
Miami Beach, Fl, 33139
Phone: (305) 673-7610 Fax: (305) 673-7857

Owner/ Qualifier / Contractor Estimate Construction Cost Affidavit
(To be submitted for the main/master permits or the stand alone permits)

Permit Number: B1400599 **Date:** 12/21/13

Job Address: 2125 Bay Drive **Folio No.** 3210-011-0730

The construction cost should include the work under the main permit and all associated permits.

Part I: FEMA 50% Related Construction Cost		
Items to be excluded from Estimate Construction Cost for Part I (FEMA 50% Related Construction Cost): *Plan and Specification, Survey Cost, Permit Fees, Swimming Pools, detached structures (garages, storages, cabanas), Landscaping, Fences, Yard light , Not Built-ins Appliances and Furniture.*		
Estimated Construction Cost	**General Contractor Cost**	**Owner Cost**
Demolition & Removal	$ 1,000	Ø
Building & Structural Elements	Ø	Ø
Roofing	Ø	Ø
Doors & Windows	$ 4,500	Ø
Railing	Ø	Ø
Interior Finish, Floor Covering, Painting	$ 9,500	Ø
Cabinets and Furniture-Built-Ins	$ 5,500	Ø
Appliances-Built-Ins	Ø	Ø
Other Building related Items	Ø	Ø
Electrical including Fixtures	$ 3,500	Ø
Elevator	Ø	Ø
Mechanical-HVAC-equipments	Ø	Ø
Plumbing including Fixtures	$ 1,500	Ø
Overhead and Profit	27%	Ø
Sub Total Construction Cost	$ 9,450.00	$
Sub Total Construction Cost Estimate for FEMA 50% Rule Purposes	$ 34,950	

MIAMIBEACH
BUILDING DEPARTMENT
1700 Convention Center Drive, 2nd Floor
Miami Beach, Fl, 33139
Phone: (305) 673-7610 Fax: (305) 673-7857

Part II: Non Related FEMA 50% Construction Cost		
Estimated Construction Cost	**General Contractor Cost**	**Owner Cost**
Swimming Pools	Ø	
Fences, Pavers, Sidewalks, Site Improvements	Ø	
Yard Light	Ø	
Other and detached: garages, storage and cabanas	Ø	
Sub Total Cost	$ Ø	$
Sub Total Construction Cost Estimate for non FEMA 50% Rule Purposes	$ Ø	

Part III: Total Construction Cost (Note: The construction cost will be validated by Plan Examiners)	
Estimated Construction Cost	
Sub Total Construction Cost Estimate for FEMA 50% Rule Purposes-Part I	$ 34,950.00
Sub Total Construction Cost Estimate for Non FEMA 50% Rule Purposes- Part II	$ 0.00
Total Construction Cost Estimate. (Add Part I and Part II of Construction Cost)	$ 34,950.00

Part IV: Signature Required

If the improvements cost will increase at any point during the proposed construction, It is Owner and the Contractor of Record responsibility to submit the revised improvements cost to the Building Department for review and approval.

Signature of Owner

STATE OF FLORIDA
COUNTY OF Miami Dade

Sworn to and Subscribed before me this 27 day of November 2013, by:
Ana Olin

[✓] Personally known [ ] Produced Identification - Type of Identification

Magaly Fonseca
COMMISSION # EE192081
EXPIRES: APR. 24, 2016
WWW.AARONNOTARY.com

Signature of Notary Public

MIAMIBEACH
BUILDING DEPARTMENT
1700 Convention Center Drive, 2nd Floor
Miami Beach, Fl, 33139
Phone: (305) 673-7610 Fax: (305) 673-7857

Signature of Qualifier / Contractor

STATE OF FLORIDA
COUNTY OF Miami Dade

Sworn to and Subscribed before me this 27 day of November 2013, by:
Axel R Galdamez

[X] Personally known [ ] Produced Identification - Type of Identification

Magaly Fonseca
COMMISSION # EE 192081
EXPIRES: APR. 24, 2016
WWW.AARONNOTARY.com

Signature of Notary Public

Part V: Building Department Use Only

A	Sub Total Construction Cost Estimate for FEMA 50% Rule Purposes.	$	0 34,950
B	Over Five Year Improvements	$	0
C	Total Improvements	$	35,000
D	Building Tax Assessed Value	$	247,414
E	Building Appraised Market Value	$	~~247,414~~
F	Improvements Cost Ratio (C/E or C/D)	%	14.12 %

If improvements cost exceed 40% of the Building Tax Value, a building appraised market Value is required for evaluation of Improvement Cost Ratio.

Check one box:

☐ New Construction and Substantial Improvement ☒ Existing Building and Non Substantial Improvement

Flood Plain Compliance Reviewer

Flood Plain Compl Reviewer signature and date 12-03-13.

Note: Over $1,000,000.00 Improvements Cost requires Chief Flood Plan Compliance Division Approval, over $50,000,000.00 Improvements Cost requires Building Director Approval.

Name

Signature and Date

BOUNDARY SURVEY

LEGAL DESCRIPTION:

LOT 8, OF BLOCK 41, IN "MIAMI VIEW SECTION-ISLE OF NORMANDY PART 3," ACCORDING TO THE PLAT THEREOF, AS RECORDED IN PLAT BOOK 40, AT PAGE 33, OF THE PUBLIC RECORDS OF MIAMI-DADE COUNTY, FLORIDA.

PROPERTY ADDRESS:

FOLIO No. 02-3210-011-0730

2125 BAY DRIVE

MIAMI BEACH, FL 33141

CERTIFIED TO:

- ANA MARIA OLIN

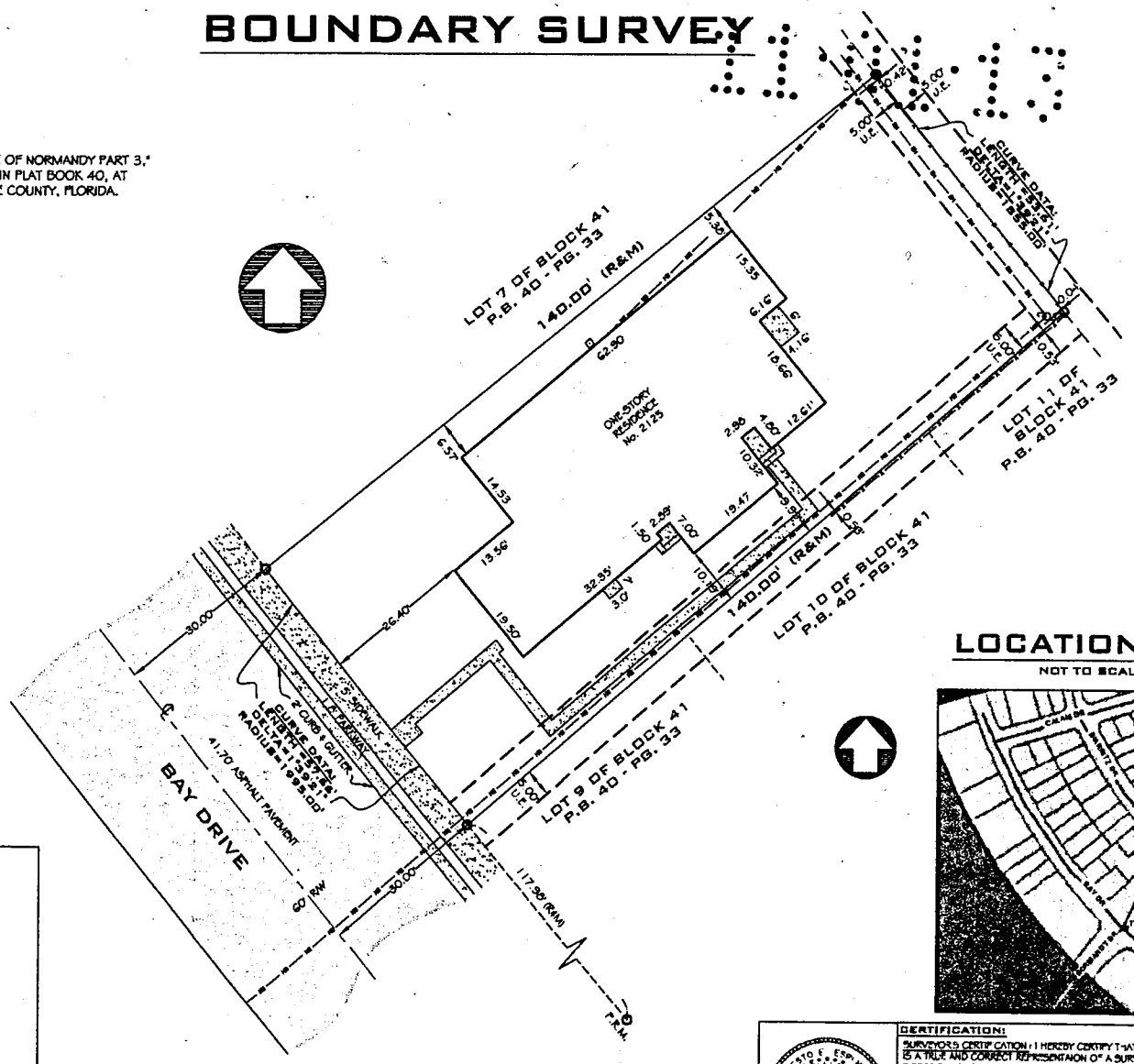

LOCATION MAP

NOT TO SCALE

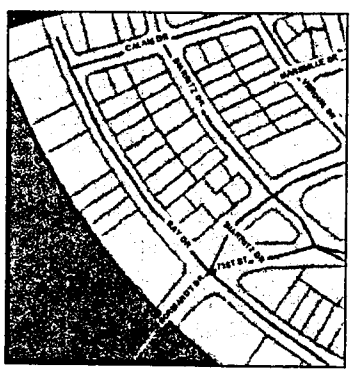

GENERAL NOTES:

LEGAL DESCRIPTION PROVIDED BY OTHERS.
EXAMINATION OF THE ABSTRACT OF THE TITLE WILL HAVE TO BE MADE TO DETERMINE RECORDED INSTRUMENTS, IF ANY, AFFECT THIS PROPERTY.
THE LANDS SHOWN HEREON WERE NOT ABSTRACTED FOR EASEMENT OR OTHER RECORDED ENCUMBRANCES NOT SHOWN ON THE PLAT.
THE WRITTEN CONSENT OF LANDMARK SURVEYING & ASSOCIATES, INC. UNDERGROUND PORTIONS OF FOOTING, FOUNDATIONS OR OTHER IMPROVEMENTS WERE NOT LOCATED.
ONLY VISIBLE AND ABOVE GROUND ENCROACHMENTS LOCATED.
WALL TIES ARE THE FACE OF THE WALL.
FENCE OWNERSHIP NOT DETERMINED.
BEARINGS REFERENCED TO LINE NOTED AS D.R.
BOUNDARY SURVEY MEANS A DRAWING AND/OR GRAPHIC REPRESENTATION OF THE SURVEY WORK PERFORMED IN THE FIELD, COULD BE DRAWN AT A SHOWN SCALE AND/OR NOT TO SCALE.
NO IDENTIFICATION FOUND ON PROPERTY CORNERS UNLESS NOTED.
NOT VALID UNLESS SEALED WITH THE SIGNING SURVEYORS EMBOSSED SEAL.
DIMENSIONS SHOWN ARE FLAT AND MEASURED UNLESS OTHERWISE SHOWN.
ELEVATIONS IF SHOWN ARE BASED UPON N.G.V.D. 1929 UNLESS OTHERWISE NOTED.
THIS IS A BOUNDARY SURVEY UNLESS OTHERWISE NOTED.
THIS BOUNDARY SURVEY WAS SIGN PREPARED FOR THE EXCLUSIVE USE OF THE ENTITIES NAME HEREON. THE CERTIFICATIONS DO NOT EXTEND TO ANY UNNAMED PARTIES.

CERTIFICATION:

SURVEYOR'S CERTIFICATION: I HEREBY CERTIFY THAT THIS "FINAL SURVEY" IS A TRUE AND CORRECT REPRESENTATION OF A SURVEY PREPARED UNDER MY DIRECTION. THIS COMPLIES WITH THE MINIMUM TECHNICAL STANDARDS, AS SET FORTH BY THE STATE OF FLORIDA BOARD OF PROFESSIONAL LAND SURVEYORS IN CHAPTER 61G17, FLORIDA ADMINISTRATIVE CODE.

SIGNED _____ FOR THE FIRM
ERNESTO E. ESPINOSA P.S.M. No. 2946-STATE OF FLORIDA
NOT VALID WITHOUT AN AUTHENTIC ELECTRONIC SIGNATURE AND AUTHENTICATED ELECTRONIC SEAL AND/OR THIS MAP IS NOT VALID WITHOUT THE SIGNATURE AND THE ORIGINAL RAISED SEAL OF A LICENSE SURVEYOR AND MAPPER.

ERNESTO E. ESPINOSA CERTIFICATE No. 2946 STATE OF FLORIDA PROFESSIONAL SURVEYOR & MAPPER

SEAL

LANDMARK SURVEYING & ASSOCIATES, INC.
LB No. 7633
PROFESSIONAL SURVEYORS AND MAPPERS
P.O. BOX 127601 MIAMI, FLORIDA 33012
PHONE: (305) 556-4002 FAX: (305) 556-4003
WWW.LMSURVEYING.COM
EMAIL: LANDMARKSURVEYING@HOTMAIL.COM

ABBREVIATIONS AND LEGEND:

A/C	=DENOTES AIR CONDITIONING UNIT
APPR.	=DENOTES APPROXIMATE
ASPH.	=DENOTES ASPHALT
B.C.	=DENOTES BLOCK CORNER
B.M.	=DENOTES BENCH MARK
C.B.S.	=DENOTES CONCRETE BLOCK STUCCO
CONC.	=DENOTES CONCRETE
C.&G.	=DENOTES CURB & GUTTER
V.G.	=DENOTES VALLEY GUTTER
℄	=DENOTES CENTERLINE
M	=DENOTES MONUMENT LINE
D.M.E.	=DENOTES DRAINAGE & MAINTENANCE EASEMENT
DIA.	=DENOTES DIAMETER
D.H.	=DENOTES DRILL HOLE
(M)	=DENOTES MEASURE
(R)	=DENOTES RECORD
R/W	=DENOTES RIGHT-OF-WAY
U.E.	=DENOTES UTILITY EASEMENT
P.B.	=DENOTES PLAT BOOK
PG.	DENOTES PAGE
P.C.P.	DENOTES PERMANENT CONTROL POINT
P.O.B.	=DENOTES "POINT" OF BEGINNING
TYP.	=DENOTES TYPICAL
—W—	=DENOTES WOOD FENCE
—x—	=DENOTES CHAINLINK FENCE
—o—	=DENOTES IRON FENCE
o	=DENOTES FOUND IRON PIPE (NO ID.)
△	=DENOTES FOUND NAIL AND DISC
	=DENOTES ASPHALT PAVEMENT
	=DENOTES BRICK
	=DENOTES CONCRETE PAD

ALL BEARINGS AND DISTANCES SHOWN HEREON ARE RECORD AND MEASURED UNLESS OTHERWISE NOTED.

FLOOD ZONE:	AE
ELEVATION:	8.0
COMMUNITY:	120651
PANEL:	307
DATE OF FIRM:	09-11-2009
SUFFIX:	L
FIELD DATE OF SURVEY	09-03-2013
BENCH MARK:	N/A
ELEVATION:	N/A

DATE	DRAWN BY	SCALE
09-04-2013	JFE	1"=20'

REVISION / UPDATE OF SURVEY

DATE	DESCRIPTION
N/A	N/A

JOB No.

1308-027

BOUNDARY SURVEY

MIAMI-DADE COUNTY
DEPARTMENT OF REGULATORY AND ECONOMIC RESOURCES (RER)
BOARD AND CODE ADMINISTRATION DIVISION

MIAMI-DADE COUNTY
PRODUCT CONTROL SECTION
11805 SW 26 Street, Room 208
T (786) 315-2590 F (786) 315-2599
www.miamidade.gov/economy

NOTICE OF ACCEPTANCE (NOA)

Pino's Window Corporation
6860 NW 75th Street
Medley, FL 33166

SCOPE:

This NOA is being issued under the applicable rules and regulations governing the use of construction materials. The documentation submitted has been reviewed and accepted by Miami-Dade County RER - Product Control Section to be used in Miami-Dade County and other areas where allowed by the Authority Having Jurisdiction (AHJ).

This NOA shall not be valid after the expiration date stated below. The Miami-Dade County Product Control Section (In Miami Dade County) and/or the AHJ (in areas other than Miami Dade County) reserve the right to have this product or material tested for quality assurance purposes. If this product or material fails to perform in the accepted manner, the manufacturer will incur the expense of such testing and the AHJ may immediately revoke, modify, or suspend the use of such product or material within their jurisdiction. RER reserves the right to revoke this acceptance, if it is determined by Miami-Dade County Product Control Section that this product or material fails to meet the requirements of the applicable building code. This product is approved as described herein, and has been designed to comply with the Florida Building Code, including the High Velocity Hurricane Zone.

DESCRIPTION: Series "FWS-200" Aluminum Single Hung Window – N.I.

APPROVAL DOCUMENT: Drawing No W12-20, titled "Series FWS-200 Alum Single Hung Wdw. (N.I.)", Sheets 1 through 5 of 5, dated 05/14/12, prepared by Al-Farooq Corporation, signed and sealed by Javad Ahmad, P.E., bearing the Miami-Dade County Product Control Approval stamp with the Notice of Acceptance number and approval date by the Miami-Dade County Product Control Section.

MISSILE IMPACT RATING: None

LABELING: Each unit shall bear a permanent label with the manufacturer's name or logo, city, state, model/series, and following statement: "Miami-Dade County Product Control Approved", unless otherwise noted herein.

RENEWAL of this NOA shall be considered after a renewal application has been filed and there has been no change in the applicable building code negatively affecting the performance of this product.

TERMINATION of this NOA will occur after the expiration date or if there has been a revision or change in the materials, use, and/or manufacture of the product or process. Misuse of this NOA as an endorsement of any product, for sales, advertising or any other purposes shall automatically terminate this NOA. Failure to comply with any section of this NOA shall be cause for termination and removal of NOA.

ADVERTISEMENT: The NOA number preceded by the words Miami-Dade County, Florida, and followed by the expiration date may be displayed in advertising literature. If any portion of the NOA is displayed, then it shall be done in its entirety.

INSPECTION: A copy of this entire NOA shall be provided to the user by the manufacturer or its distributors and shall be available for inspection at the job site at the request of the Building Official.

This NOA consists of this page 1 and evidence page E-1, as well as approval document mentioned above.

The submitted documentation was reviewed by **Manuel Perez, P.E.**

MIAMI-DADE COUNTY APPROVED

5/2/13

NOA No. 13-0114.06
Expiration Date: May 09, 2018
Approval Date: May 09, 2013

Pino's Window Corporation

NOTICE OF ACCEPTANCE: EVIDENCE SUBMITTED

A. DRAWINGS

1. Manufacturer's die drawings and sections.
2. Drawing No **W12–20**, titled "Series FWS-200 Alum Single Hung Wdw. (N.I.)", Sheets 1 through 5 of 5, dated 05/14/12, prepared by Al–Farooq Corporation, signed and sealed by Javad Ahmad, P.E.

B. TESTS

1. Test reports on: 1) Air Infiltration Test, per FBC, TAS 202-94
   2) Uniform Static Air Pressure Test, Loading per FBC, TAS 20294
   3) Water Resistance Test, per FBC, TAS 202-94
   4) Forced Entry Test, per FBC 2411 3.2.1 and TAS 202-94

   along with marked–up drawings and installation diagram of an aluminum single hung window, prepared by Fenestration Testing Laboratory, Inc., Test Report No. **FTL–6670,** dated 03/21/12, signed and sealed by Marlin D. Brinson, P.E.

C. CALCULATIONS

1. Anchor verification calculations and structural analysis, complying with FBC–2010, prepared by Al–Farooq Corporation, dated 06/04/12, signed and sealed by Javad Ahmad, P.E.
2. Glazing complies with ASTM E1300-04

D. QUALITY ASSURANCE

1. Miami-Dade Department of Regulatory and Economic Resources (RER)

E. MATERIAL CERTIFICATIONS

1. None.

F. STATEMENTS

1. Statement letter of conformance, complying with FBC-2010, and of no financial interest, dated April 9, 2013, signed and sealed by Javad Ahmad, P.E.

G. OTHER

1. None.

Manuel Perez

Manuel Perez, P.E.
Product Control Examiner
NOA No. 13-0114.06
Expiration Date: May 09, 2018
Approval Date: May 09, 2013

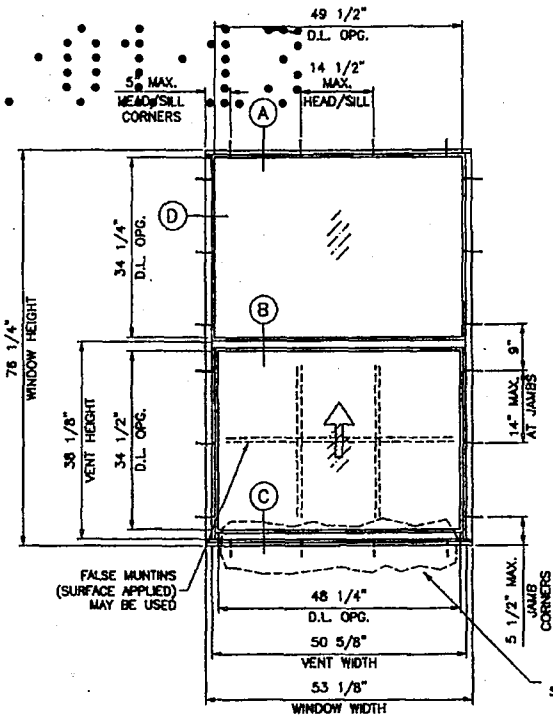

EQUAL LITES

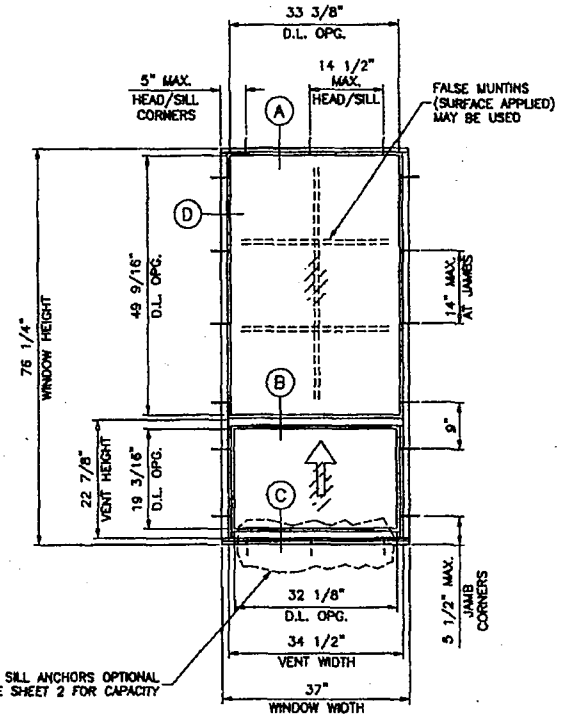

UNEQUAL LITES (ORIEL TYPE)
SEE CHART ON SHEET 2 FOR OTHER SIZES

TYPICAL ELEVATIONS

WINDOWS NOT RATED FOR IMPACT.
INSTALLATION OF THIS PRODUCT IN THE HVHZ AREA REQUIRES THE USE OF APPROVED SHUTTERS OR EXTERNAL PROTECTION DEVICES COMPLYING WITH HVHZ REQUIREMENTS.
INSTALLATION OF THIS SYSTEM OUTSIDE THE HVHZ AREA SHALL MEET THE APPLICABLE REQUIREMENTS FOR WIND BORNE DEBRIS PROTECTION.

SERIES FWS-200
ALUMINUM SINGLE HUNG WINDOW

DESIGN LOAD RATINGS FOR THESE WINDOWS TO BE AS PER CHARTS SHOWN ON SHEET 2.

APPROVAL APPLIES TO SINGLE UNITS OR SIDE BY SIDE COMBINATIONS OF S.H./S.H. OR SINGLE HUNG WITH OTHER WINDOW TYPES IN MODULES OF TWO OR MORE WINDOWS USING MIAMI-DADE COUNTY APPROVED MULLIONS IN BETWEEN. LOWER DESIGN PRESSURE FROM WINDOWS OR MULLION APPROVAL WILL APPLY TO ENTIRE SYSTEM.

THIS PRODUCT HAS BEEN DESIGNED AND TESTED TO COMPLY WITH THE REQUIREMENTS OF THE FLORIDA BUILDING CODE INCLUDING HIGH VELOCITY HURRICANE ZONE (HVHZ).

WOOD BUCKS BY OTHERS, MUST BE ANCHORED PROPERLY TO TRANSFER LOADS TO THE STRUCTURE.

ANCHORS SHALL BE AS LISTED, SPACED AS SHOWN ON DETAILS, ANCHORS EMBEDMENT TO BASE MATERIAL SHALL BE BEYOND WALL DRESSING OR STUCCO.

ANCHORING OR LOADING CONDITIONS NOT SHOWN IN THESE DETAILS ARE NOT PART OF THIS APPROVAL.

A LOAD DURATION INCREASE IS USED IN DESIGN OF ANCHORS INTO WOOD ONLY.

MATERIALS INCLUDING BUT NOT LIMITED TO STEEL/METAL SCREWS, THAT COME INTO CONTACT WITH OTHER DISSIMILAR MATERIALS SHALL MEET THE REQUIREMENTS OF THE FLORIDA BLDG. CODE SECTION 2003.8.4.

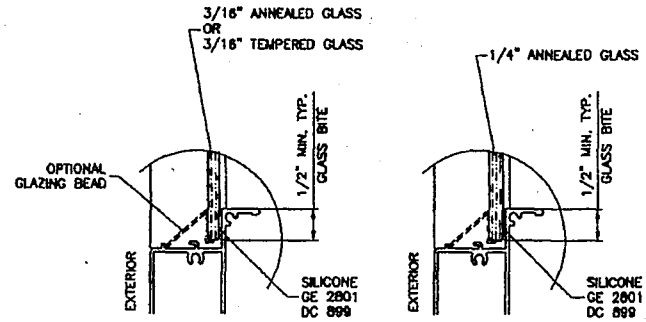

GLAZING OPTIONS

MONOLITHIC GLASS
NON IMPACT

Engr: JAWAD AHMAD
CIVIL
FLA. PE # 70582
C.A.N. 3538

MAY 0 3 '2013

Approved as complying with the Florida Building Code
Date 4 24 2013
NOA# 12-0114.06
Miami Dade Product Control
By Manuel Perez

AL-FAROOQ CORPORATION
ENGINEERS & PRODUCT DEVELOPMENT
1235 S.W. 87 AVE
MIAMI, FLORIDA 33174
TEL. (305) 264-2100 FAX. (305) 262-0978
COMP-ANL\W12-20PWC

SERIES FWS-200 ALUM SINGLE HUNG WDW. (N.L.)
PINO'S WINDOW CORP.
6860 N.W. 75TH STREET
MEDLEY, FL. 33166
TEL. (305) 888-9946 FAX. (305) 888-6079

revisions:
no. date by description

date: 05-14-12
scale: 1/2" = 1"
dr. by: HAMID
chk. by:

drawing no.
W12-20

sheet 1 of 5

EQUAL LITES WINDOWS
DESIGN LOAD CAPACITY – PSF

WINDOW DIMS.		WINDOWS WITHOUT SILL ANCHORS						WINDOWS WITH SILL ANCHORS					
		3/16" ANN. GLASS		1/4" ANN. GLASS		3/16" TEMP. GLASS		3/16" ANN. GLASS		1/4" ANN. GLASS		3/16" TEMP. GLASS	
WIDTH	HEIGHT	EXT.(+)	INT.(–)	EXT.(+)	INT.(–)	EXT.(+)	INT.(–)	EXT.(+)	INT.(–)	EXT.(+)	INT.(–)	EXT.(+)	INT.(–)
19-1/8"	26" (3)	66.7	125.0	66.7	125.0	66.7	125.0	66.7	125.0	66.7	125.0	66.7	125.0
26-1/2"		66.7	125.0	66.7	125.0	66.7	125.0	66.7	125.0	66.7	125.0	66.7	125.0
32"		66.7	125.0	66.7	125.0	66.7	125.0	66.7	125.0	66.7	125.0	66.7	125.0
37"		66.7	125.0	66.7	125.0	66.7	125.0	66.7	125.0	66.7	125.0	66.7	125.0
42"		66.7	119.2	66.7	119.2	66.7	119.2	66.7	125.0	66.7	125.0	66.7	125.0
48"		66.7	104.3	66.7	104.3	66.7	104.3	66.7	125.0	66.7	125.0	66.7	125.0
53-1/8"		66.7	94.3	66.7	94.3	66.7	94.3	66.7	117.8	66.7	125.0	66.7	125.0
19-1/8"	38-3/8" (4)	66.7	125.0	66.7	125.0	66.7	125.0	66.7	125.0	66.7	125.0	66.7	125.0
26-1/2"		66.7	125.0	66.7	125.0	66.7	125.0	66.7	125.0	66.7	125.0	66.7	125.0
32"		66.7	125.0	66.7	125.0	66.7	125.0	66.7	125.0	66.7	125.0	66.7	125.0
37"		66.7	122.3	66.7	122.3	66.7	122.3	66.7	125.0	66.7	125.0	66.7	125.0
42"		66.7	107.7	66.7	107.7	66.7	107.7	66.7	114.9	66.7	125.0	66.7	125.0
48"		66.7	94.2	66.7	94.2	66.7	94.2	66.7	96.9	66.7	123.4	66.7	125.0
53-1/8"		66.7	85.2	66.7	85.2	66.7	85.2	66.7	85.5	66.7	108.8	66.7	110.3
19-1/8"	50-5/8" (4)	66.7	125.0	66.7	125.0	66.7	125.0	66.7	125.0	66.7	125.0	66.7	125.0
26-1/2"		66.7	125.0	66.7	125.0	66.7	125.0	66.7	125.0	66.7	125.0	66.7	125.0
32"		66.7	107.2	66.7	107.2	66.7	107.2	66.7	125.0	66.7	125.0	66.7	125.0
37"		66.7	92.7	66.7	92.7	66.7	92.7	66.7	115.9	66.7	125.0	66.7	125.0
42"		66.7	81.6	66.7	81.6	66.7	81.6	66.7	98.2	66.7	122.4	66.7	125.0
48"		66.7	71.4	66.7	71.4	66.7	71.4	66.7	79.8	66.7	101.6	66.7	104.4
53-1/8"		64.6	64.6	64.6	64.6	64.6	64.6	66.7	69.7	66.7	88.7	66.7	90.3
19-1/8"	57" (5)	66.7	125.0	66.7	125.0	66.7	125.0	66.7	125.0	66.7	125.0	66.7	125.0
26-1/2"		66.7	125.0	66.7	125.0	66.7	125.0	66.7	125.0	66.7	125.0	66.7	125.0
32"		66.7	125.0	66.7	125.0	66.7	125.0	66.7	125.0	66.7	125.0	66.7	125.0
37"		66.7	107.5	66.7	123.5	66.7	123.5	66.7	107.5	66.7	125.0	66.7	125.0
42"		66.7	90.3	66.7	108.8	66.7	108.8	66.7	90.3	66.7	114.9	66.7	120.6
48"		66.7	74.3	66.7	94.5	66.7	95.2	66.7	74.3	66.7	94.5	66.7	97.5
53-1/8"		64.5	64.5	66.7	82.0	66.7	83.7	64.5	64.5	66.7	82.0	66.7	83.7
19-1/8"	63" (6)	66.7	125.0	66.7	125.0	66.7	125.0	66.7	125.0	66.7	125.0	66.7	125.0
26-1/2"		66.7	125.0	66.7	125.0	66.7	125.0	66.7	125.0	66.7	125.0	66.7	125.0
32"		66.7	111.2	66.7	125.0	66.7	125.0	66.7	111.2	66.7	125.0	66.7	125.0
37"		66.7	98.0	66.7	111.7	66.7	111.7	66.7	96.0	66.7	125.0	66.7	125.0
42"		66.7	85.6	66.7	98.4	66.7	98.4	66.7	85.6	66.7	109.9	66.7	116.0
48"		66.7	70.3	66.7	86.1	66.7	86.1	66.7	70.3	66.7	89.5	66.7	92.6
53-1/8"		60.7	60.7	66.7	77.2	66.7	77.8	60.7	60.7	66.7	77.2	66.7	79.0
19-1/8"	76-1/4" (6)	66.7	125.0	66.7	125.0	66.7	125.0	66.7	125.0	66.7	125.0	66.7	125.0
26-1/2"		66.7	110.6	66.7	125.0	66.7	125.0	66.7	110.6	66.7	125.0	66.7	125.0
32"		66.7	93.8	66.7	106.7	66.7	106.7	66.7	93.8	66.7	123.6	66.7	125.0
37"		66.7	80.8	66.7	92.3	66.7	92.3	66.7	80.8	66.7	105.1	66.7	121.9
42"		66.7	73.1	66.7	81.3	66.7	81.3	66.7	73.1	66.7	94.0	66.7	111.4
48"		64.7	64.7	66.7	71.2	66.7	71.2	64.7	64.7	66.7	82.4	66.7	86.1
53-1/8"		55.0	55.0	64.3	64.3	64.3	64.3	55.0	55.0	66.7	70.0	66.7	72.1

* NO. IN PARENTHESIS INDICATE NO. OF ANCHORS PER JAMB.

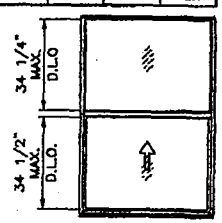

UNEQUAL LITES WINDOWS
DESIGN LOAD CAPACITY – PSF

WINDOW DIMS.		WINDOWS WITHOUT SILL ANCHORS						WINDOWS WITH SILL ANCHORS					
		3/16" ANN. GLASS		1/4" ANN. GLASS		3/16" TEMP. GLASS		3/16" ANN. GLASS		1/4" ANN. GLASS		3/16" TEMP. GLASS	
WIDTH	HEIGHT	EXT.(+)	INT.(–)	EXT.(+)	INT.(–)	EXT.(+)	INT.(–)	EXT.(+)	INT.(–)	EXT.(+)	INT.(–)	EXT.(+)	INT.(–)
19-1/8"	50-5/8" (5)	66.7	125.0	66.7	125.0	66.7	125.0	66.7	125.0	66.7	125.0	66.7	125.0
26-1/2"		66.7	125.0	66.7	125.0	66.7	125.0	66.7	125.0	66.7	125.0	66.7	125.0
32"		66.7	111.5	66.7	125.0	66.7	125.0	66.7	111.5	66.7	125.0	66.7	125.0
37"		66.7	98.3	66.7	115.9	66.7	115.9	66.7	98.3	66.7	125.0	66.7	125.0
42"		66.7	85.8	66.7	102.1	66.7	102.1	66.7	85.8	66.7	113.7	66.7	125.0
48"		66.7	72.6	66.7	89.3	66.7	89.3	66.7	72.6	66.7	97.0	66.7	106.8
53-1/8"		63.2	63.2	66.7	80.7	66.7	80.7	63.2	63.2	66.7	85.6	66.7	92.1
19-1/8"	57" (5)	66.7	125.0	66.7	125.0	66.7	125.0	66.7	125.0	66.7	125.0	66.7	125.0
26-1/2"		66.7	111.7	66.7	125.0	66.7	125.0	66.7	111.7	66.7	125.0	66.7	125.0
32"		66.7	94.6	66.7	119.0	66.7	119.0	66.7	94.6	66.7	124.7	66.7	125.0
37"		66.7	81.3	66.7	102.9	66.7	102.9	66.7	81.3	66.7	105.9	66.7	125.0
42"		66.7	73.7	66.7	90.6	66.7	90.6	66.7	73.7	66.7	94.7	66.7	125.0
48"		65.2	65.2	66.7	79.3	66.7	79.3	65.2	65.2	66.7	83.2	66.7	102.5
53-1/8"		57.9	57.9	66.7	71.7	66.7	71.7	57.9	57.9	66.7	74.1	66.7	87.4
19-1/8"	63" (6)	66.7	125.0	66.7	125.0	66.7	125.0	66.7	125.0	66.7	125.0	66.7	125.0
26-1/2"		66.7	92.7	66.7	125.0	66.7	125.0	66.7	92.7	66.7	125.0	66.7	125.0
32"		66.7	80.6	66.7	106.5	66.7	125.0	66.7	80.6	66.7	106.5	66.7	125.0
37"		66.7	72.4	66.7	93.1	66.7	111.7	66.7	72.4	66.7	93.1	66.7	125.0
42"		64.1	64.1	66.7	81.5	66.7	98.4	64.1	64.1	66.7	81.5	66.7	125.0
48"		57.9	57.9	66.7	73.0	66.7	86.1	57.9	57.9	66.7	73.0	66.7	100.8
19-1/8"	76-1/4" (6)	66.7	125.0	66.7	125.0	66.7	125.0	66.7	125.0	66.7	125.0	66.7	125.0
26-1/2"		66.7	88.0	66.7	98.7	66.7	125.0	66.7	88.0	66.7	98.7	66.7	125.0
32"		56.7	56.7	66.7	76.9	66.7	106.7	56.7	56.7	66.7	76.9	66.7	125.0
37"		53.4	53.4	66.7	68.9	66.7	92.3	53.4	53.4	66.7	68.9	66.7	117.5

* NO. IN PARENTHESIS INDICATE NO. OF ANCHORS PER JAMB.

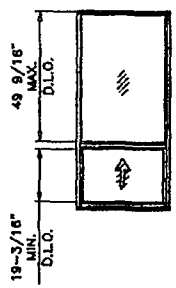

NOTE:
GLASS CAPACITIES ON THIS SHEET ARE BASED ON ASTM E1300-04 (3 SEC. GUSTS) AND FLORIDA BUILDING COMMISSION DECLARATORY STATEMENT DCA05-DEC-219

Engr: JAVAD AHMAD
CIVIL
FLA. PE # 70592
C.A.N. 3538
MAY 03 2013

Approved as complying with the Florida Building Code
Date May 9, 2013
NOA# 13-1011.06
Miami Dade Product Control
By

AL-FAROOQ CORPORATION
ENGINEERS & PRODUCT DEVELOPMENT
12235 S.W. 87 AVE
MIAMI, FLORIDA 33174
TEL. (305) 264-8100 FAX. (305) 262-8978
COMP-ANL\W12-20PWC

SERIES FWS-200 ALUM SINGLE HUNG WDW. (N.I.)

PINO'S WINDOW CORP.
6860 N.W. 75TH STREET
MEDLEY, FL. 33166
TEL. (305) 888-9946 FAX (305) 888-8079

revisions:

no.	date	by	description

date: 05-14-12
scale: 1/2" = 1'
dr. by: HAMID
chk. by:

drawing no. W12-20

sheet 2 of 5

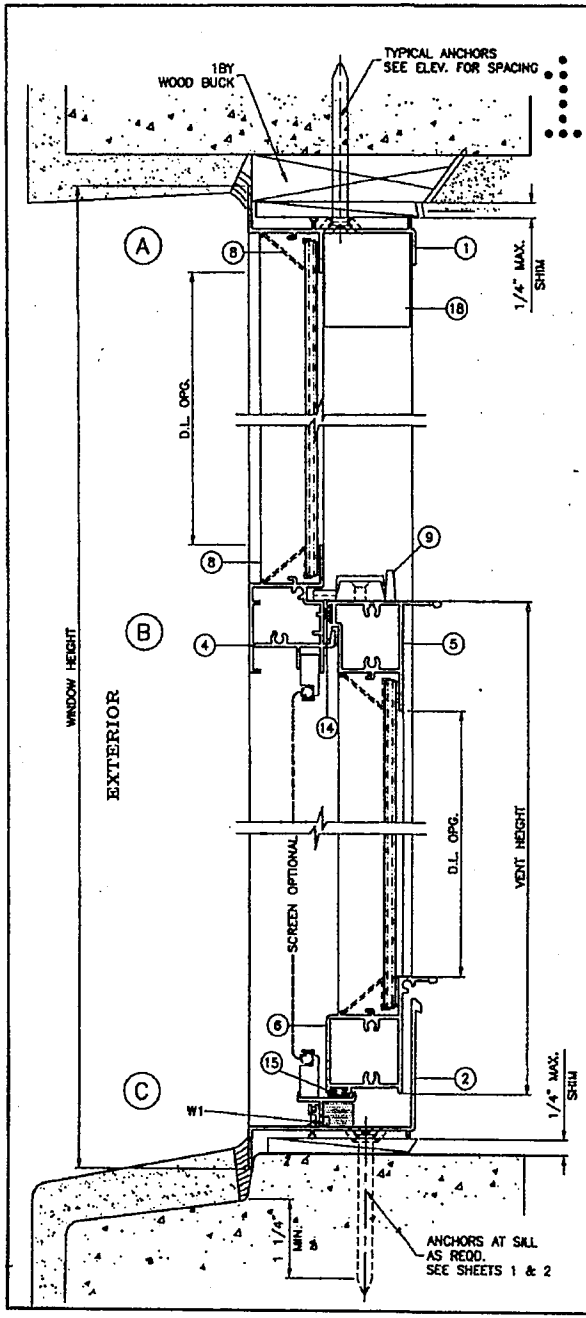

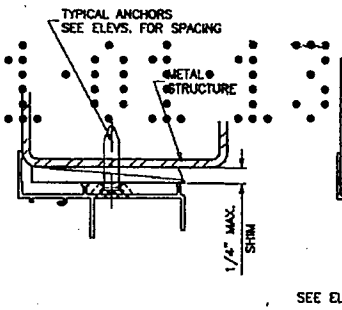

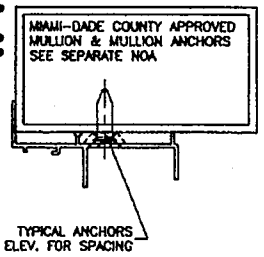

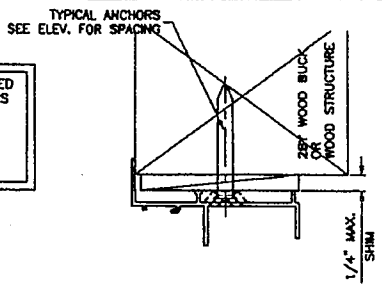

WOOD BUCKS AND METAL STRUCTURE NOT BY PINO WINDOWS MUST SUSTAIN LOADS IMPOSED BY GLAZING SYSTEM AND TRANSFER THEM TO THE BUILDING STRUCTURE.

TYPICAL ANCHORS: SEE ELEV. FOR SPACING

1/4" DIA. TAPCON BY 'ITW' (Fu=120 KSI, Fy=92 KSI)
1/4" DIA. ULTRACON BY 'ELCO' (Fu=177 KSI, Fy=155 KSI)

INTO 2BY WOOD BUCKS OR WOOD STRUCTURES
1-1/2" MIN. PENETRATION INTO WOOD

THRU 1BY BUCKS INTO CONC. OR MASONRY
1-1/4" MIN. EMBED INTO CONC. OR MASONRY

DIRECTLY INTO CONC. OR MASONRY
1-1/4" MIN. EMBED INTO CONC. OR MASONRY

#14 SMS OR SELF DRILLING SCREWS (GRADE 2 CRS)
INTO METAL STRUCTURES
STEEL : 12 GA. MIN. (Fy = 36 KSI MIN.)
ALUMINUM : 1/8" THK. MIN. (6063-T5 MIN.)
(STEEL IN CONTACT WITH ALUMINUM TO BE PLATED OR PAINTED)

#12 SMS OR SELF DRILLING SCREWS (GRADE 2 CRS)
INTO MIAMI-DADE COUNTY APPROVED MULLIONS (MIN. THK. = .090")
(NO SHIM SPACE)

TYPICAL EDGE DISTANCE
INTO CONCRETE AND MASONRY = 1-1/2" MIN.
INTO WOOD STRUCTURE = 1" MIN.
INTO METAL STRUCTURE = 3/4" MIN.

CONCRETE AT HEAD, SILL OR JAMBS f'c = 3000 PSI MIN.
C-90 HOLLOW/FILLED BLOCK AT JAMBS f'm = 2000 PSI MIN.

SEALANT:

ALL JOINTS AND FRAME CONNECTIONS SEALED WITH SCHNEE-MOREHEAD 5504 SEALANT.

WEEPHOLES:

W1 = 1-1/2" X 1/4" WEEPHOLES AT 3-1/2" FROM EACH END

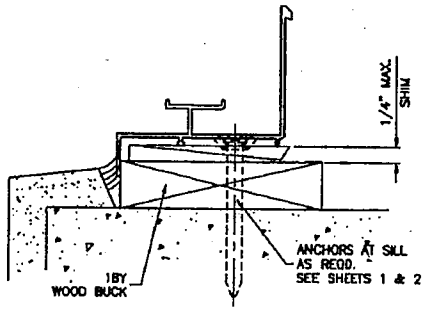

Engr: JAWAD AHMAD
CIVIL
FLA. PE # 70592
C.A.N. 3535

MAY 03 2013

Approved as complying with the Florida Building Code
Date May 9 2013
NOA# 13-0114.06
Miami Dade Product Control
By Manuel Perez

AL-FAROOQ CORPORATION
ENGINEERS & PRODUCT DEVELOPMENT
12235 S.W. 87 AVE
MIAMI, FLORIDA 33174
TEL. (305) 254-8100 FAX. (305) 252-8978
COMP-ANL\W12-20PWC

SERIES FWS-200 ALUM SINGLE HUNG WDW. (N.I.)

PINO'S WINDOW CORP.
6860 N.W. 75TH STREET
MEDLEY, FL. 33166
TEL. (305) 888-9946 FAX (305) 888-8079

revisions:

no	date	by	description

date: 05-14-12
scale: 1/2" = 1"
dr. by: HAMID
chk. by:

drawing no.
W12-20

sheet 3 of 5

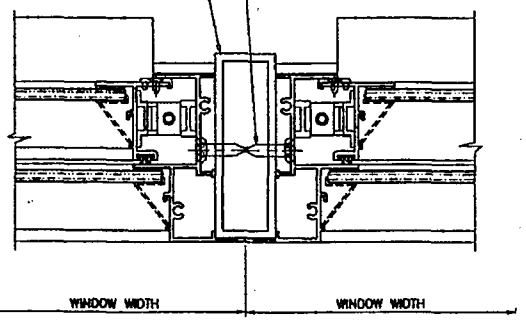

ITEM #	PART #	REQD.	DESCRIPTION	MATERIAL	MANF./SUPPLIER/REMARKS
1	FWS-020	1	FRAME HEAD	6063-T6	–
2	FWS-021	1	FRAME SILL	6063-T6	–
3	FWS-022	2	FRAME JAMB	6063-T6	–
4	FWS-025	1	FIXED MTG. RAIL	6063-T6	–
5	FWS-024	1	VENT TOP RAIL	6063-T6	–
6	FWS-023	1	VENT BOTTOM RAIL	6063-T6	–
7	FWS-016	2	VENT SIDE RAIL	6063-T6	–
8	–	AS REQD.	OPTIONAL GLAZING BEAD	ALUMINUM	ROLL FORMED
9	–	2/VENT	CAM TYPE SWEEP LOCK, AT 12" FROM ENDS	ZAMAK	INTALLED W/ (2) #6 X 3/4" PH SMS
10	–	–	–	–	–
11	895	AS REQD.	GLAZING COMPOUND	–	PECORA
12	#8 X 1-1/4"	2/ CORNER	FRAME & FIX. RAIL ASSEMBLY SCREWS	CRS	PH SMS
13	#8 X 3/4"	2/ CORNER	VENT ASSEMBLY SCREWS	CRS	PH SMS
14	W21175	AS REQD.	PILE W'STRIPPING WITH PLASTIC FIN	–	ULTRAFAB
15	E205	AS REQD.	BULB W'STRIPPING	SANTOPRENE	–
16	–	2/VENT	BLOCK AND TACKLE BALANCE		–
17	#6 X 3/8"	–	SASH GUIDE SCREWS	–	FH
18	20-09	2	SASH STOP	ALUMINUM	–
19	–	4	SASH GUIDE	–	–
20	–	1	5/16" BOX SCREEN	–	OPTIONAL

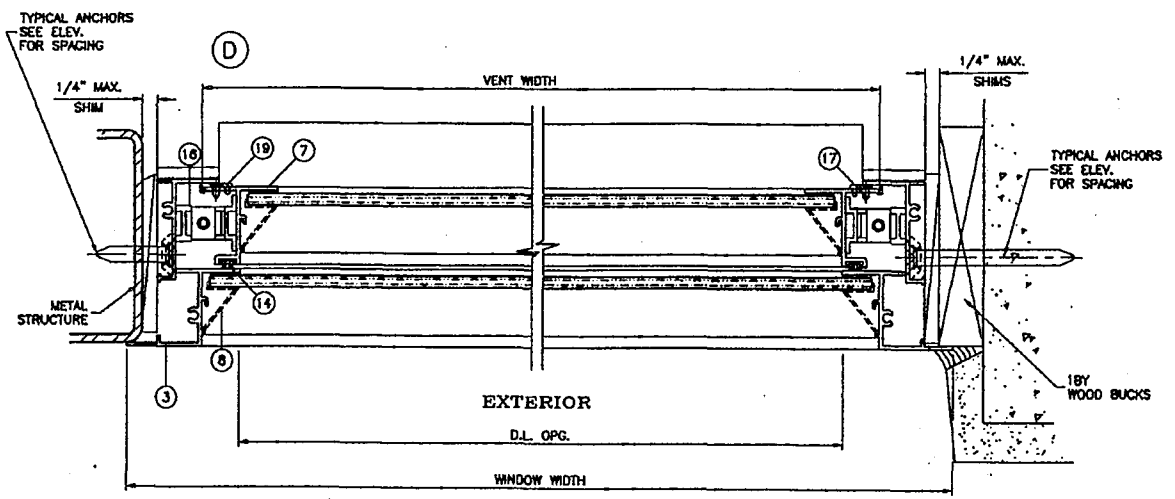

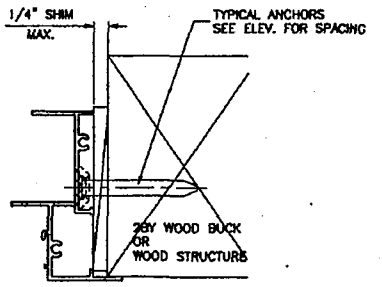

Engr: JAWAD AHMAD
CIVIL
FLA. PE # 70592
C.A.N. 3638

MAY 03 2013

Approved as complying with the
Florida Building Code
Date Nov 19, 2013
NOA# 13-0114.06
Miami Dade Product Control
By Manuel Perez

AL-FAROOQ CORPORATION
ENGINEERS & PRODUCT DEVELOPMENT
12235 S.W. 87 AVE
MIAMI, FLORIDA 33174
TEL. (305) 284-8100 FAX. (305) 263-8975
COMP-ANL\W12-20PWC

SERIES FWS-200 ALUM. SINGLE HUNG WDW. (N.I.)

PINO'S WINDOW CORP.
6860 N.W. 75TH STREET
MEDLEY, FL. 33166
TEL. (305) 888-9948 FAX. (305) 888-8079

revisions:

no.	date	by	description

date: 05-14-12
scale: 1/2" = 1'
dr. by: HAMID
chk. by:

drawing no.
W12-20

sheet 4 of 5

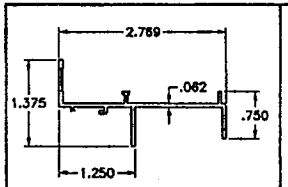

1 FRAME HEAD

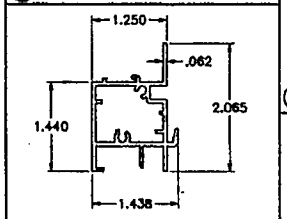

4 FIX. MEETING RAIL

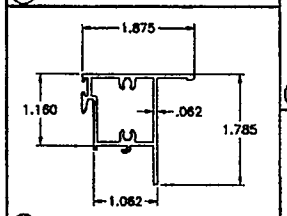

5 VENT TOP RAIL

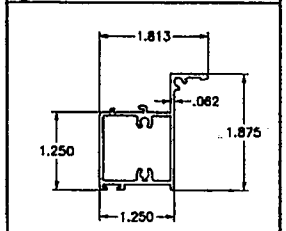

6 VENT BOTTOM RAIL

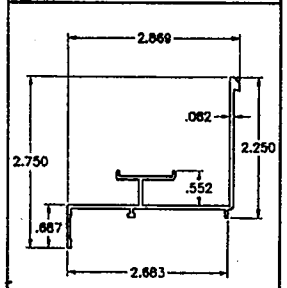

2 FRAME SILL

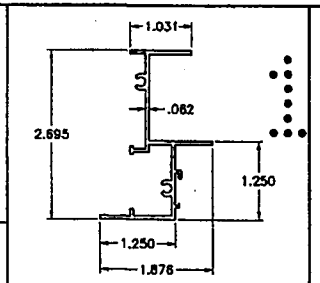

3 FRAME JAMB

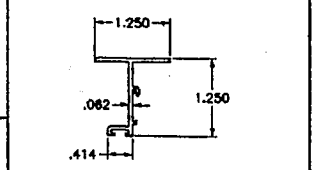

7 VENT SIDE RAIL

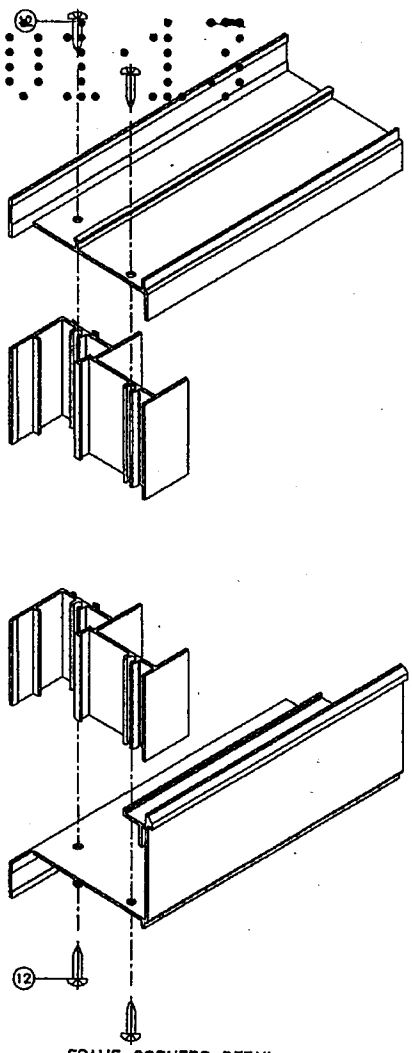

FRAME CORNERS DETAIL

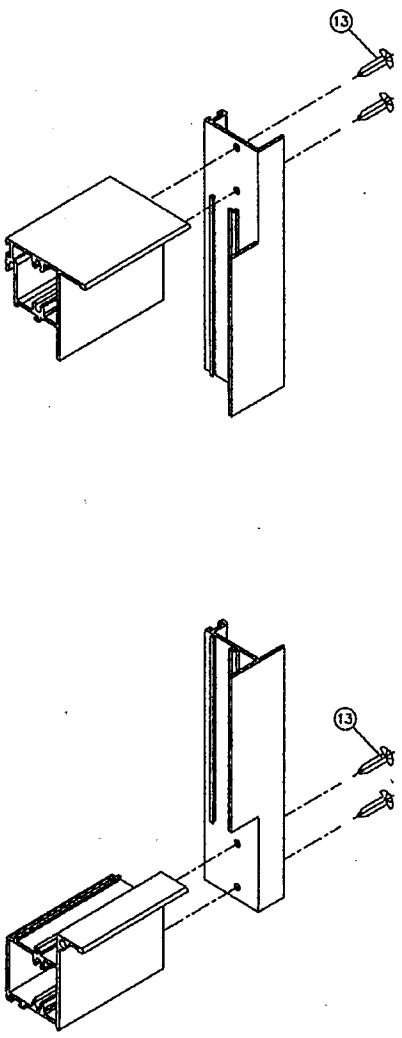

VENT CORNER DETAIL

Engr: JAWAD AHMAD
CIVIL
FLA. PE # 70592
C.A.N. 3538

MAY 03 2013

Approved as complying with the Florida Building Code
Date May 9 2013
NOA# 13-0114.06
Miami Dade Product Control
By Manuel Perez

AL-FAROOQ CORPORATION
ENGINEERS & PRODUCT DEVELOPMENT
1235 S.W. 87 AVE
MIAMI, FLORIDA 33174
TEL. (305) 264-8100 FAX. (305) 262-8978

COMP-ANL\W12-20PWC

SERIES FWS-200 ALUM SINGLE HUNG WDW. (N.L.)

PINO'S WINDOW CORP.
6860 N.W. 75TH STREET
MEDLEY, FL. 33166
TEL. (305) 888-9946 FAX (305) 888-8079

revisions:

no	date	by	description

date: 05-14-12
scale: 1/2" = 1"
dr. by: HAMID
chk. by:

drawing no.
W12-20

sheet 5 of 5

MIAMI-DADE COUNTY
DEPARTMENT OF PERMITTING, ENVIRONMENT, AND REGULATORY AFFAIRS (PERA)
BOARD AND CODE ADMINISTRATION DIVISION

MIAMI-DADE COUNTY
PRODUCT CONTROL SECTION
11805 SW 26 Street, Room 208
Miami, Florida 33175-2474
T (786) 315-2590 F (786) 315-2599
www.miamidade.gov/building

NOTICE OF ACCEPTANCE (NOA)

Eastern Metal Supply, Inc.
4268 Westroads Dr.
West Palm Beach, Florida 33407

SCOPE:
This NOA is being issued under the applicable rules and regulations governing the use of construction materials. The documentation submitted has been reviewed and accepted by Miami-Dade County PERA-Product Control Section to be used in Miami Dade County and other areas where allowed by the Authority Having Jurisdiction (AHJ).

This NOA shall not be valid after the expiration date stated below. The Miami-Dade County Product Control Section (In Miami Dade County) and/or the AHJ (in areas other than Miami Dade County) reserve the right to have this product or material tested for quality assurance purposes. If this product or material fails to perform in the accepted manner, the manufacturer will incur the expense of such testing and the AHJ may immediately revoke, modify, or suspend the use of such product or material within their jurisdiction. PERA reserves the right to revoke this acceptance, if it is determined by Miami-Dade County Product Control Section that this product or material fails to meet the requirements of the applicable building code.

This product is approved as described herein, and has been designed to comply with the High Velocity Hurricane Zone of the Florida Building Code.

DESCRIPTION: 0.030" Galvanized Steel Storm Panels Shutter

APPROVAL DOCUMENT: Drawing No. 11-116, titled "0.030" Thick Galvanized Bertha Steel Storm Panel", sheets 1 through 9 of 9, and 1A of 9, prepared by Tilteco, Inc., last revision #1 dated November 15, 2011, signed and sealed by Walter A. Tillit Jr., P.E. on November 23, 2011, bearing Miami-Dade County Product Control Revision stamp with the Notice of Acceptance number and expiration date by Miami-Dade County Product Control Section.

MISSILE IMPACT RATING: Large and Small Missile Impact Resistant

LABELING: Each panel shall bear a permanent label with the manufacturer's name or logo, city, state, the following statement: "Miami-Dade County Product Control Approved", and NOA number, per TAS-201, TAS-202, and TAS-203, unless otherwise noted herein.

RENEWAL of this NOA shall be considered after a renewal application has been filed and there has been no change in the applicable building code negatively affecting the performance of this product.

TERMINATION of this NOA will occur after the expiration date or if there has been a revision or change in the materials, use, and/or manufacture of the product or process. Misuse of this NOA as an endorsement of any product, for sales, advertising or any other purposes shall automatically terminate this NOA. Failure to comply with any section of this NOA shall be cause for termination and removal of NOA.

ADVERTISEMENT: The NOA number preceded by the words Miami-Dade County, Florida, and followed by the expiration date may be displayed in advertising literature. If any portion of the NOA is displayed, then it shall be done in its entirety.

INSPECTION: A copy of this entire NOA shall be provided to the user by the manufacturer or its distributors and shall be available for inspection at the job site at the request of the Building Official.

This NOA **revises NOA # 09-0330.04** and consists of this page 1, evidence submitted pages E-1, E-2, and E-3 as well as approval document mentioned above.

The submitted documentation was reviewed by **Helmy A. Makar, P.E., M.S.**

MIAMI-DADE COUNTY APPROVED

Helmy A. Makar
05/17/2012

NOA No. 12-0209.07
Expiration Date: 06/07/2014
Approval Date: 05/17/2012

NOTICE OF ACCEPTANCE: EVIDENCE SUBMITTED

1. EVIDENCE SUBMITTED UNDER PREVIOUS APPROVAL #00-0919.10

A. DRAWINGS

1. *Drawing No. 00-252, titled "24 Gage Galvanized Bertha Steel Storm Panels", prepared by Tilteco, Inc., dated July 10, 2000, last revision #1 dated April 3, 2001, sheets 1 through 9 of 9, signed and sealed by Walter A. Tillit Jr., P.E.*

B. TESTS

1. *Test report on Large Missile Impact Test, Cyclic Wind Pressure Test and Uniform Static Air Pressure Test of Galvanized Steel Storm Panels, prepared by American Test Lab of South Florida, Report No. ATL 0425.01-00, dated August 22, 2000, signed and sealed by Henry Hattem, P.E. and William R. Mehner, P.E.*

C. CALCULATIONS

1. *Storm panel shutter Calculations, sheets 1 through 78 by Tilteco, Inc., signed and sealed by Walter A. Tillit Jr., P.E., dated 09/11/2000.*

D. MATERIAL CERTIFICATIONS

1 *Mill Certified Inspection Report, dated 05/97, for Hot Dipped Galvanized coating G-60 Steel, ASTM A653 Grade 40 (ASTM 446GR-C) by Robert O'Neil of R & R Metals, Inc., with chemical composition and physical properties.*

2. *Tensile Test Reports from Hurricane Engineering & Testing Inc., Job No. HETI-97-T48 dated July 17, 1997 for 20 ga. Galvanized Steel, tested per ASTM E8-93, signed and sealed by Hector M. Medina, P.E.*

2. EVIDENCE SUBMITTED UNDER PREVIOUS APPROVAL #02-0809.04

A. DRAWINGS

1. *Drawing No. 02-446, titled " 24 gage Galvanized Bertha Steel Storm Panel ", sheets 1 through 9 of 9, prepared by Tilteco, Inc., dated September 05, 2002, signed and sealed by Walter A. Tillit Jr., P.E.*

B. TESTS

1. *None.*

C. CALCULATIONS

1. *None.*

D. MATERIAL CERTIFICATIONS

1. *None.*

Helmy A. Makar, P.E., M.S.
PERA, Product Control Unit Supervisor
NOA No. 12-0209.07
Expiration Date: 06/07/2014
Approval Date: 05/17/2012

NOTICE OF ACCEPTANCE: EVIDENCE SUBMITTED

3. EVIDENCE SUBMITTED UNDER PREVIOUS APPROVAL # 04-0517.01

A. DRAWINGS

1. *Drawing No. 02-446, titled " 24 gage Galvanized Bertha Steel Storm Panel ", sheets 1 through 9 of 9, prepared by Tilteco, Inc., dated September 05, 2002, signed and sealed by Walter A. Tillit Jr., P.E.*

B. TESTS

1. *None.*

C. CALCULATIONS

1. *None.*

D. QUALITY ASSURANCE

1. *By Miami-Dade County Building Code Compliance Office.*

E. MATERIAL CERTIFICATIONS

1. *None.*

4. EVIDENCE SUBMITTED UNDER PREVIOUS APPROVAL # 05-0926.02

A. DRAWINGS

1. *Drawing No. 05-073, titled " 0.030" Thick Galvanized Bertha Steel Storm Panel", sheets 1 through 9 of 9, and 1A of 9, prepared by Tilteco, Inc., dated 04/25/2005, last revision #1 dated 04/25/2005 signed and sealed by Walter A. Tillit Jr., P.E. on 09/15/2005*

B. TESTS

1. *Test report on Large Missile Impact Test and Cyclic Wind Pressure Test of Galvanized Steel Storm Panels, prepared by American Test Lab of South Florida, Report No. ATLSF 0616.01-05, dated September 15, 2005, signed and sealed by William R. Mehner, P.E.*

C. CALCULATIONS

1. *Storm panel shutter Calculations, sheets 1 through 91 by Tilteco, Inc., signed and sealed by Walter A. Tillit Jr., P.E. on 09/13/2005.*

D. QUALITY ASSURANCE

1. *By Miami-Dade County Building Code Compliance Office.*

E. MATERIAL CERTIFICATIONS

1. *Tensile Test Report from QC Metallurgical, Inc., Job No. 51M-926, dated September 20, 2005, tested per ASTM E8-93, signed and sealed by Frank Grate, P.E.*

Helmy A. Makar, P.E., M.S.
PERA, Product Control Unit Supervisor
NOA No. 12-0209.07
Expiration Date: 06/07/2014
Approval Date: 05/17/2012

NOTICE OF ACCEPTANCE: EVIDENCE SUBMITTED

5. EVIDENCE SUBMITTED UNDER PREVIOUS APPROVAL # 09-0330.04

A. DRAWINGS

1. *Drawing No. 09-013, titled " 0.030" Thick Galvanized Bertha Steel Storm Panel", sheets 1 through 9 of 9, and 1A of 9, prepared by Tilteco, Inc., dated 02/04/2009, last revision #1 dated 02/04/2009 signed and sealed by Walter A. Tillit Jr., P.E. on 02/18/2009.*

B. TESTS

1. *None.*

C. CALCULATIONS

1. *Storm panel shutter Calculations, sheets 1 through 91 by Tilteco, Inc., signed and sealed by Walter A. Tillit Jr., P.E. on 02/18/2009.*

D. QUALITY ASSURANCE

1. *By Miami-Dade County Building Code Compliance Office.*

E. MATERIAL CERTIFICATIONS

1. *None.*

5. NEW EVIDENCE SUBMITTED

A. DRAWINGS

1. *Drawing No. 11-116, titled " 0.030" Thick Galvanized Bertha Steel Storm Panel", sheets 1 through 9 of 9, and 1A of 9, prepared by Tilteco, Inc., last revision #1 dated November 15, 2011, signed and sealed by Walter A. Tillit Jr., P.E. on November 23, 2011.*

B. TESTS

1. *None.*

C. CALCULATIONS

1. *None.*

D. QUALITY ASSURANCE

1. *By Miami-Dade County Department of Permitting, Environment, and Regulatory Affairs (PERA).*

E. MATERIAL CERTIFICATIONS

1. *None.*

F. OTHERS

1. *Florida Building Code, 2010 edition, compliance letter issued by Tilteco, Inc., dated January 13, 2012, signed and sealed by Walter A. Tillit Jr., P.E.*

Helmy A. Makar, P.E., M.S.
PERA, Product Control Unit Supervisor
NOA No. 12-0209.07
Expiration Date: 06/07/2014
Approval Date: 05/17/2012

11.01.23

GENERAL NOTES:

1. STORM PANEL SHOWN ON THIS PRODUCT APPROVAL DOCUMENT (P.A.D.) HAS BEEN VERIFIED FOR COMPLIANCE IN ACCORDANCE WITH THE 2007 & 2010 EDITIONS OF THE FLORIDA BUILDING CODE.
STORM PANEL MAY BE INSTALLED AT HIGH VELOCITY HURRICANE ZONES. DESIGN WIND LOADS SHALL BE DETERMINED AS PER SECTION 1620 OF THE ABOVE MENTIONED CODES,
DESIGN WIND LOADS SHALL BE DETERMINED AS PER SECTION 1620 OF THE ABOVE MENTIONED CODES, USING ASCE 7-05 STANDARD FOR INSTALLATIONS UNDER 2007 FBC & ASCE 7-10 FOR INSTALLATIONS UNDER 2010 FBC AND SHALL NOT EXCEED THE MAXIMUM (A.S.D.) DESIGN PRESSURE RATINGS INDICATED ON SHEETS 4, 5, 6, 7 & 9.
IN ORDER TO VERIFY THE ABOVE CONDITION, ULTIMATE DESIGN WIND LOADS DETERMINED PER ASCE 7-10 SHALL BE FIRST REDUCED TO A.S.D. DESIGN WIND LOADS BY MULTIPLYING THEM BY 0.6 IN ORDER TO COMPARE THESE W/ MAX. (A.S.D) DESIGN PRESSURE RATINGS INDICATED ON SHEETS 4, 5, 6, 7 & 9.
IN ORDER TO VERIFY THAT COMPONENTS AND ANCHORS ON THIS P.A.D. AS TESTED WERE NOT OVER STRESSED, A 33% INCREASE IN ALLOWABLE STRESS FOR WIND LOADS WAS NOT USED IN THEIR ANALYSIS. FASTENERS SPACING TO WOOD HAS BEEN DETERMINED IN ACCORDANCE WITH N.D.S. 2005
STORM PANEL'S ADEQUACY FOR IMPACT AND FATIGUE RESISTANCE HAS BEEN VERIFIED IN ACCORDANCE WITH SECTION 1626 OF THE ABOVE MENTIONED CODES AS PER ATL REPORTS # 2425.01-00 AND # 0616.01-05, AS PROTOCOLS TAS-201, TAS-202 AND TAS-203.

2. ALL STEEL SHEET METAL PANELS SHALL HAVE STRUCTURAL QUALITY ASTM A-653 SQ, GRADE 40, WITH G-90 GALVANIZED STEEL DESIGNATION & Fy= 52.3 ksi. (AFTER ROLLED)

3. ALL ALUMINUM EXTRUSIONS SHALL BE ALUMINUM ASSOCIATION 6063-T6 ALLOY & TEMPER UNLESS OTHERWISE NOTED.

4. ALL SCREWS TO BE STAINLESS STEEL 304 OR 316 AISI SERIES OR CORROSION RESISTANT COATED CARBON STEEL AS PER DIN 50018 W/ 50 ksi YIELD STRENGTH AND 90 ksi TENSILE STRENGTH AND SHALL COMPLY W/ FBC SECTION 2411.3.3.4.

5. BOLTS TO BE ASTM A-307 GALVANIZED STEEL, OR AISI 304 SERIES STAINLESS STEEL, WITH 36 ksi MINIMUM YIELD STRENGTH.

6. ANCHORS TO WALL SHALL BE AS FOLLOWS:

(A) TO EXISTING POURED CONCRETE MINIMUM EDGE DISTANCE (E.D.), AS PER SHEETS 5 THRU 7:

- 1/4"ø TAPCONS & MAXI-SET TAPCONS ANCHORS AS MANUFACTURED BY I.T.W./BUILDEX, INC (Min. f'c=3192 psi)
- 1/4"ø CRETE-FLEX SS4 ANCHORS AS MANUFACTURED BY ELCO CONSTRUCTION PRODUCTS (Min. f'c=3350 psi)
- 1/4"ø x 7/8" CALK-IN ANCHORS AS MANUFACTURED BY POWER FASTENERS, INC. (Min. f'c=3000 psi)
  - 1/4"ø "PANELMATE FEMALE ID" OR 1/4"ø "PANELMATE PLUS" ANCHORS AS MANUFACTURED BY ELCO CONSTRUCTION PRODUCTS (Min. f'c=3350 psi)
- 1/4"ø x 3/4" ALL POINTS SOLID-SET ANCHORS AS DISTRIBUTED BY ALL POINTS SCREW, BOLT & SPECIALTY CO. (Min. f'c=3000 psi)

NOTES:

A.1) MINIMUM EMBEDMENT INTO POURED CONCRETE OF TAPCON ANCHOR OR CRETE-FLEX SS4 IS 1 3/4", AND 2" FOR "PANELMATE FEMALE ID" AND "PANELMATE PLUS".

A.2) 7/8" CALK-IN ANCHORS SHALL BE ENTIRELY EMBEDDED INTO POURED CONCRETE. NO EMBEDMENT INTO STUCCO SHALL BE PERMITTED. 1/4" #-20 SCREWS USED SHALL BE 1 1/2" LONG MINIMUM SHOULD STUCCO EXIST, AND 1" MINIMUM FOR WALLS WITH NO STUCCO.

A.3) MINIMUM EMBEDMENT OF 1/4"ø x 3/4" ALL POINTS SOLID-SET ANCHORS SHALL BE 7/8" INTO POURED CONCRETE. NO EMBEDMENT INTO STUCCO SHALL BE PERMITTED. 1/4" #-20 S.S. MACHINE SCREW USED SHALL BE 1 1/2" LONG MINIMUM SHOULD STUCCO EXIST, AND 1" MINIMUM FOR WALLS WITH NO STUCCO.

A.4) IN CASE THAT PRECAST STONE, PRECAST CONCRETE PANELS, OR PAVERS BE FOUND ON THE EXISTING WALL OR FLOOR, ANCHORS SHALL BE LONG ENOUGH TO REACH THE MAIN STRUCTURE BEHIND SUCH PANELS, ANCHORAGE SHALL BE AS INDICATED ON NOTES A.1), A.2) & A.3) ABOVE.

(B) TO EXISTING CONCRETE BLOCK ASTM C-90:

- 1/4"ø TAPCONS & MAXI-SET TAPCONS ANCHORS AS MANUFACTURED BY I.T.W./BUILDEX, INC.
- 1/4"ø CRETE-FLEX SS4 ANCHORS AS MANUFACTURED BY ELCO CONSTRUCTION PRODUCTS
- 1/4"ø x 7/8" CALK-IN ANCHORS AS MANUFACTURED BY POWER FASTENERS, INC. (Min. f'm=1500 psi)
  - 1/4"ø "PANELMATE FEMALE ID" OR 1/4"ø "PANELMATE PLUS" ANCHORS AS MANUFACTURED BY ELCO CONSTRUCTION PRODUCTS (Min. f'm=2071 psi)
- 1/4"ø x 3/4" ALL POINTS SOLID-SET ANCHORS AS DISTRIBUTED BY ALL POINTS SCREW, BOLT & SPECIALTY CO. (Min. f'm=1800 psi)

NOTES:

B.1) MINIMUM EMBEDMENT OF TAPCON ANCHORS, "PANELMATE FEMALE ID" ANCHORS, "PANELMATE PLUS" ANCHORS AND CRETE-FLEX SS4 ANCHORS, INTO THE CONCRETE BLOCK UNIT SHALL BE 1 1/4".

B.2) 7/8" CALK-IN ANCHORS SHALL BE ENTIRELY EMBEDDED INTO THE CONCRETE BLOCK UNIT. NO EMBEDMENT INTO STUCCO SHALL BE PERMITTED. 1/4" #-20 SCREWS USED SHALL BE 1 1/2" LONG MINIMUM SHOULD STUCCO EXIST, AND 1" MINIMUM FOR WALLS WITH NO STUCCO.

B.3) MINIMUM EMBEDMENT OF 1/4"ø x 3/4" ALL POINTS SOLID-SET ANCHORS SHALL BE 7/8" INTO THE CONCRETE BLOCK UNIT. NO EMBEDMENT INTO STUCCO SHALL BE PERMITTED. 1/4" #-20 S.S. MACHINE SCREW USED SHALL BE 1 1/2" LONG MINIMUM SHOULD STUCCO EXIST, AND 1" MINIMUM FOR WALLS WITH NO STUCCO.

B.4) IN CASE THAT PRECAST STONE OR PRECAST CONCRETE PANELS BE FOUND ON THE EXISTING WALL, ANCHORS SHALL BE LONG ENOUGH TO REACH THE MAIN STRUCTURE BEHIND SUCH PANELS. ANCHORAGE SHALL BE AS INDICATED ON NOTES IN B.1), B.2) & B.3) ABOVE.

(C) TO EXISTING WOOD (MIN. SPECIFIC GRAVITY, G = 0.55 MIN.): MINIMUM EDGE DISTANCE (E.D.) AS PER SHEETS 8 AND 9.

- 1/4"ø "PANEMALTE PLUS" AND "PANELMATE FEMALE ID" ANCHORS AS MANUFACTURED BY ELCO CONSTRUCTION PRODUCTS.
- 1/4"ø LAG SCREWS PER N.D.S.

NOTES:

C.1) MINIMUM THREADED PENETRATION INTO WOOD OF "PANEMALTE PLUS" ANCHORS AND female PANELMATES SHALL BE 1 7/8".

C.2) MINIMUM THREADED PENETRATION OF LAG SCREWS, INTO THE WOOD FRAME UNIT SHALL BE 1 1/2" NO THREADED PENETRATION INTO STUCCO SHALL BE CONSIDERED AS PART OF THE REQUIRED THREADED PENETRATION (EXCEPT AS NOTED).

C.3) IN CASE THAT PRECAST STONE, OR PRECAST CONCRETE PANELS, STUCCO OR WOOD BANS BE FOUND ON THE EXISTING WALL, ANCHORS SHALL BE LONG ENOUGH TO REACH THE MAIN STRUCTURE BEHIND SUCH PANELS. ANCHORAGE SHALL BE AS MENTIONED IN C.1) AND C.2).

(D) ANCHORS SHALL BE INSTALLED FOLLOWING ALL OF THE RECOMMENDATIONS AND SPECIFICATIONS OF THE ANCHOR'S MANUFACTURER.

PANELS MAY BE ALSO INSTALLED HORIZONTALLY FOLLOWING INSTALLATION DETAILS SHOWN ON SECTIONS 1 THRU 8 (SHEETS 2 & 3 OF 9) AND SECTIONS A AND B (SHEETS 8 AND 9) EXCEPT THAT HEADERS ②, ③ & ④ SHALL NOT BE USED.

8. AT LEAST ONE WARNING LABEL PER OPENING SHALL BE PLACED IN A CONSPICUOUS LOCATION ON ANY OF THE COMPONENTS OF THE STORM PANELS SYSTEM ADVISING THE HOME OWNER OR TENANT THAT STORM PANELS WILL NOT OFFER HURRICANE PROTECTION
7. UNLESS ALL REINFORCING BOLTS ARE PROPERLY INSTALLED WHEN REQUIRED.

9. IT SHALL BE THE RESPONSIBILITY OF THE CONTRACTOR TO VERIFY THE SOUNDNESS OF THE STRUCTURE WHERE SHUTTER IS TO BE ATTACHED TO INSURE PROPER ANCHORAGE. THIS SHUTTER SHALL ONLY BE ATTACHED TO CONCRETE, BLOCK OR WOOD FRAME BUILDINGS.

10. THE INSTALLATION CONTRACTOR IS TO SEAL/CAULK ALL SHUTTER COMPONENT EDGES WHICH REMAIN IN CONTINUOUS CONTACT WITH THE BUILDING TO PREVENT WIND/RAIN INTRUSION.

11. STORM PANEL INSTALLATION SHALL COMPLY WITH SPECS INDICATED IN THIS DRAWING PLUS ANY BUILDING AND ZONING REGULATIONS PROVIDED BY THE JURISDICTION WHERE PERMIT IS APPLIED TO.

12. (a) THIS PRODUCT APPROVAL DOCUMENT (P.A.D.) PREPARED BY THIS ENGINEER IS GENERIC AND DOES NOT PROVIDE INFORMATION FOR A SITE SPECIFIC PROJECT; i.e. WHERE THE SITE CONDITIONS DEVIATE FROM THE P.A.D.

(b) CONTRACTOR TO BE RESPONSIBLE FOR THE SELECTION, PURCHASE AND INSTALLATION INCLUDING LIFE SAFETY OF THIS PRODUCT BASED ON THIS P.A.D. PROVIDED HE/SHE DOES NOT DEVIATE FROM THE CONDITIONS DETAILED ON THIS DOCUMENT. CONSTRUCTION SAFETY AT SITE IS THE CONTRACTOR'S RESPONSIBILITY.

(c) THIS PRODUCT APPROVAL DOCUMENT WILL BE CONSIDERED INVALID IF MODIFIED.

(d) SITE SPECIFIC PROJECTS SHALL BE PREPARED BY A FLORIDA REGISTERED ENGINEER OR ARCHITECT WHICH WILL BECOME THE ENGINEER OF RECORD (E.O.R.) FOR THE PROJECT AND WHO WILL BE RESPONSIBLE FOR THE PROPER USE OF THE P.A.D. ENGINEER OF RECORD, ACTING AS A DELEGATED ENGINEER TO THE P.A.D. ENGINEER, SHALL SUBMIT TO THIS LATTER THE SITE SPECIFIC DRAWINGS FOR REVIEW.

(e) THIS P.A.D. SHALL BEAR THE DATE AND ORIGINAL SEAL AND SIGNATURE OF THE PROFESSIONAL ENGINEER OF RECORD THAT PREPARED IT.

13. SHUTTER MANUFACTURER'S LABEL SHALL BE PLACED ON A READILY AND VISIBLE LOCATION AT PANEL. ONE LABEL SHALL BE PLACED FOR EVERY OPENING. LABEL SHALL READ AS FOLLOWS:
EASTERN METAL SUPPLY, INC.
WEST PALM BEACH, FL.
MIAMI-DADE COUNTY PRODUCT CONTROL APPROVED.

MIAMI-DADE COUNTY

PRODUCT REVISED
as complying with the Florida Building Code
Acceptance No 12-0209.07
Expiration Date 06/07/2014
By
Miami Dade Product Control

WALTER A. TILLIT JR. LICENSE No. 44167 STATE OF FLORIDA PROFESSIONAL ENGINEER
SEAL/SIGNATURE

©2008 TILTECO, INC.

TILTECO INC.
TILLIT TESTING & ENGINEERING COMPANY
8388 N.W. 30th St., Ste. 202, Miami Gardens, FL 33166
Phone : (305)871-1630 . Fax : (305)871-1631
EB-0008718
WALTER A. TILLIT Jr. P.E.
FLORIDA Lic. # 44167

0.030" THICK GALVANIZED BERTHA STEEL STORM PANEL

EASTERN METAL SUPPLY, INC.
4268 WESTROADS DR.
WEST PALM BEACH, FL 33407

FLORIDA BUILDING CODE (High Velocity Hurricane Zone)

REV. No	DESCRIPTION	DATE	REV. No	DESCRIPTION	DATE
1	OLD 09-013	11/15/11	3	-	-
2	-	-	4	-	-

H.G.V./A.G. DRAWN BY:
11/15/11 DATE
11-116 DRAWING No
SHEET 1 OF 9

11-01-29

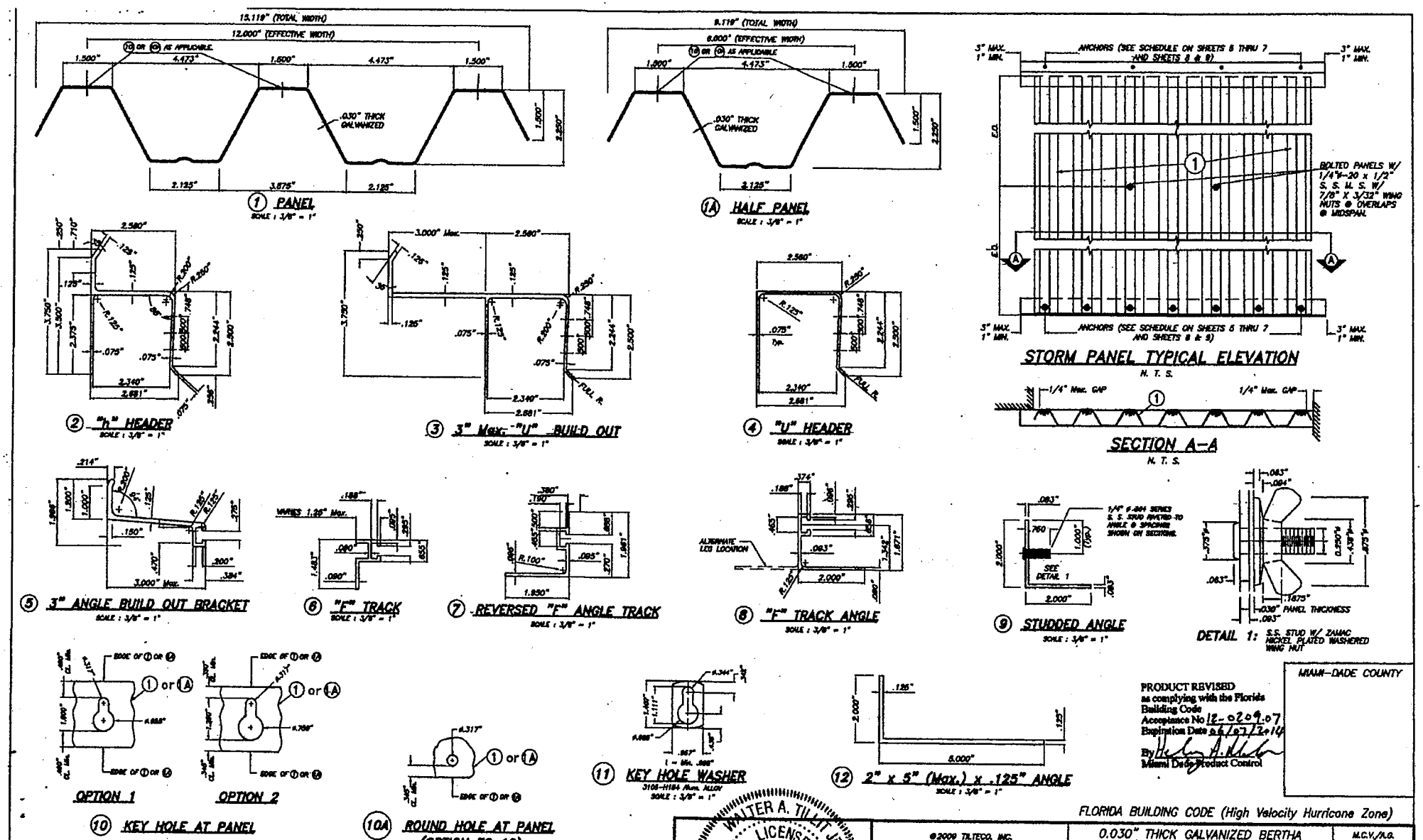

COMPONENTS

PRODUCT REVISED
as complying with the Florida
Building Code
Acceptance No 12-0209.07
Expiration Date 06/07/2014
By
Miami Dade Product Control

MIAMI-DADE COUNTY

FLORIDA BUILDING CODE (High Velocity Hurricane Zone)

WALTER A. TILLIT JR. LICENSE No. 44167 STATE OF FLORIDA PROFESSIONAL ENGINEER
11/22/11
SIGNATURE

©2009 TILTECO, INC.

TILTECO INC.
TILLIT TESTING & ENGINEERING COMPANY
EB-0006719
WALTER A. TILLIT Jr. P.E.
FLORIDA Lic. # 44167

0.030" THICK GALVANIZED BERTHA STEEL STORM PANEL

EASTERN METAL SUPPLY, INC.
4268 WESTROADS DR.
WEST PALM BEACH, FL 33407

REV. NO	DESCRIPTION	DATE	REV. No	DESCRIPTION	DATE
1	OLD 09-013	11/15/11	3	–	–
2	–	–	4	–	–

M.C.V./A.G. DRAWN BY:
11/15/11 DATE
11-116 DRAWING No
SHEET 1A OF 9

11-0115

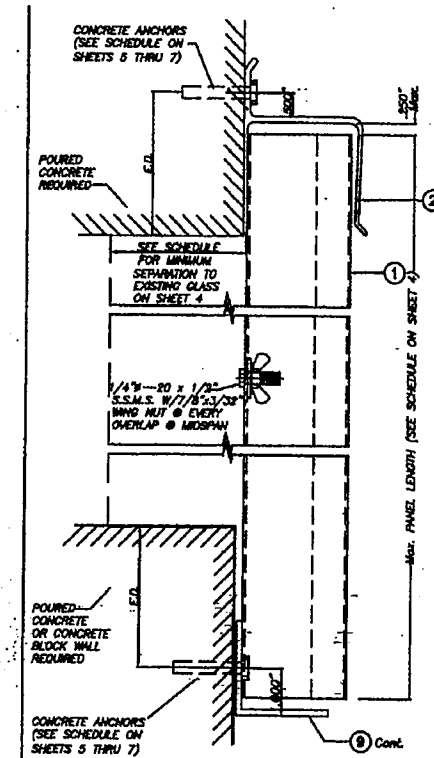

SECTION @ ANCHOR

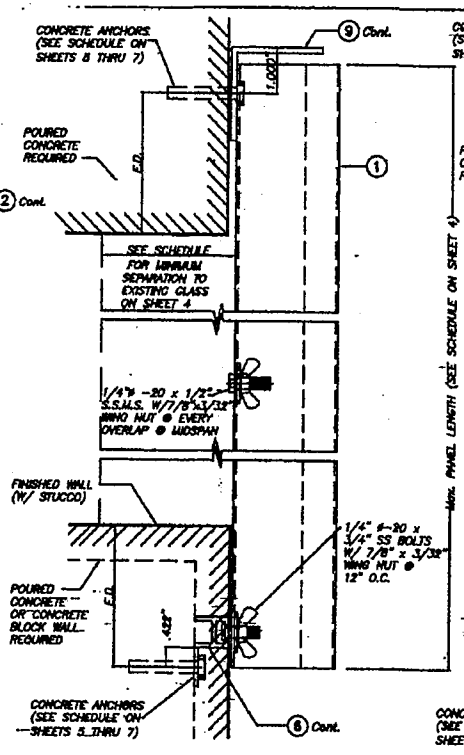

WALL MOUNTING INSTALLATION SECTION 2

SCALE : 3/8" = 1"

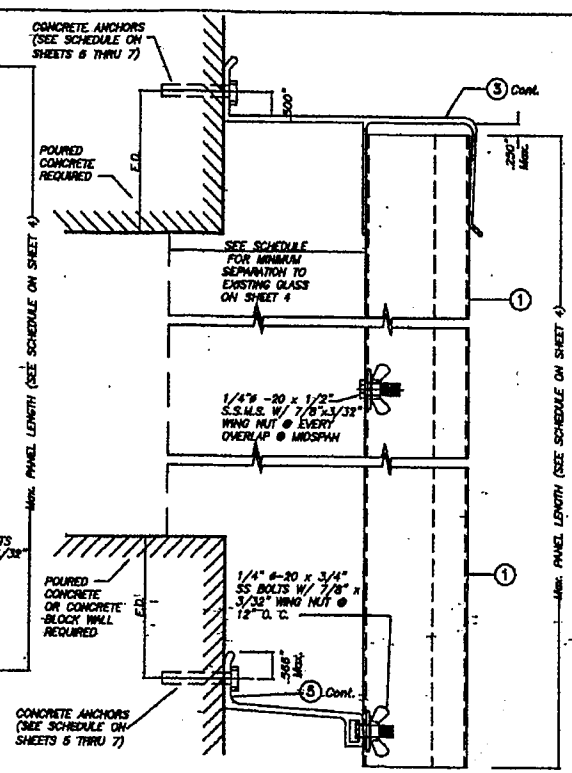

BUILD OUT INSTALLATION SECTION 3

SCALE : 3/8" = 1"

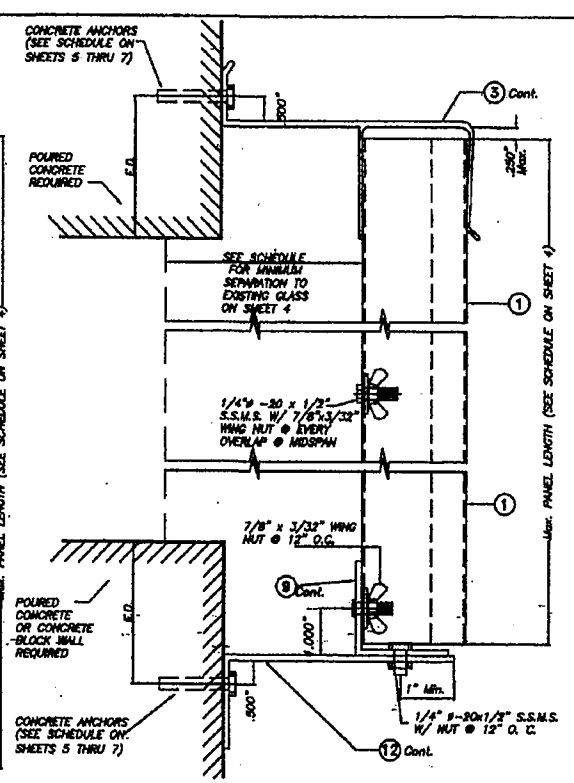

BUILD OUT INSTALLATION SECTION 4

SCALE : 3/8" = 1"

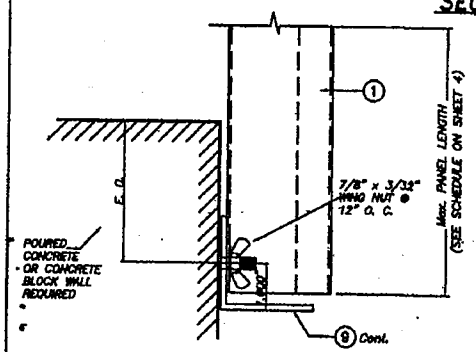

SECTION @ STUD

WALL MOUNTING INSTALLATION SECTION 1

SCALE : 3/8" = 1"

NOTE : DETAIL OF SECTION @ STUD VALID ALSO FOR WALL MOUNTING INSTALLATION – SECTION 2 (TOP)

E.D. = EDGE DISTANCE (SEE SCHEDULE ON SHEET 5 ,6 & 7 OF 9)

NOTE FOR COMBINATION OF SECTIONS :

WALL MOUNTING SECTIONS CAN BE COMBINED IN ANY WAY TO SUIT ANY INSTALLATION.

WALTER A. TILLIT JR. LICENSE No. 44167 STATE OF FLORIDA PROFESSIONAL ENGINEER

MIAMI-DADE COUNTY
PRODUCT REVISED
as complying with the Florida Building Code
Acceptance No. 12-0209.07
Expiration Date 06/07/2014
By
Miami Dade Product Control

FLORIDA BUILDING CODE (High Velocity Hurricane Zone)

©2009 TILTECO, INC.

TILTECO INC.
TILLIT TESTING & ENGINEERING COMPANY
4395 N.W. 74th. St., Sta. 305, Miami Gardens, FL 33147
Phone 1 (305)871-1630 . Fax 1 (305)871-1631
EB-0008719
WALTER A. TILLIT Jr. P.E.
FLORIDA Lic. # 44167

0.030" THICK GALVANIZED BERTHA STEEL STORM PANEL

EASTERN METAL SUPPLY, INC.
4248 WESTRONS DR.
WEST PALM BEACH, FL 33407

M.C.V./A.G. DRAWN BY
11/15/11 DATE
11-116 DRAWING No
SHEET 2 OF 9

REV. NO	DESCRIPTION	DATE	REV. No	DESCRIPTION	DATE
1	OLD 08-013	11/15/11	3	--	--
2	--	--	4	--	--

ONLINE CERTIFICATIONS DIRECTORY

Design No. U495
BXUV.U495
Fire Resistance Ratings - ANSI/UL 263

Page Bottom

Design/System/Construction/Assembly Usage Disclaimer

- *Authorities Having Jurisdiction should be consulted in all cases as to the particular requirements covering the installation and use of UL Listed or Classified products, equipment, system, devices, and materials.*
- Authorities Having Jurisdiction should be consulted before construction.
- Fire resistance assemblies and products are developed by the design submitter and have been investigated by UL for compliance with applicable requirements. The published information cannot always address every construction nuance encountered in the field.
- When field issues arise, it is recommended the first contact for assistance be the technical service staff provided by the product manufacturer noted for the design. Users of fire resistance assemblies are advised to consult the general Guide Information for each product category and each group of assemblies. The Guide Information includes specifics concerning alternate materials and alternate methods of construction.
- Only products which bear UL's Mark are considered as Classified, Listed, or Recognized.

NOTICE: In addition to the requirements of this department, there may be other laws, rules, and ordinances of Federal, State, and Local Laws which are applicable to this Design. Public Records of this County and Federal agencies, or federal agencies may be required to assume no responsibility for the accuracy of the information contained in these plans. Beach disclaims, slate agencies, or other government and local agencies. The city of Miami Beach assumes

from No. 25 MSG (min) galv steel, attached to floor and ceiling with fasteners spaced 24 in. OC, max.

1A. **Framing Members* - Floor and Ceiling Runners** — Not shown - In lieu of Item 1 — For use with Item 2A, proprietary channel shaped runners, 1-1/4 in. deep by min 3-5/8 in. wide fabricated from min 0.020 in. thick galv steel, attached to floor and ceiling with fasteners spaced 24 in. OC max.

CALIFORNIA EXPANDED METAL PRODUCTS CO — Viper20™ Track

MARINO/WARE, DIV OF WARE INDUSTRIES

INC — Viper20™ Track

TELLING INDUSTRIES L L C — Viper20™ Track

1B. **Framing Members*— Floor and Ceiling Runners** — Not shown - In lieu of Item 1 — For use with Item 2B, channel shaped runners, 1-1/4 in. deep by min 3-5/8 in. wide fabricated from min 0.018 in. thick galv steel, attached to floor and ceiling with fasteners spaced 24 in. OC max.

CLARKDIETRICH BUILDING SYSTEMS — CD ProTRAK

DMFCWBS L L C — ProTRAK

MBA BUILDING SUPPLIES — ProTRAK

SOUTHEASTERN STUD & COMPONENTS INC — ProTRAK

TELLING INDUSTRIES L L C — TRUE-TRACK™

2. **Steel Studs** — Channel-shaped 3-5/8 in. wide (min), 1-1/4 in. legs, 3/8 in. folded back returns, formed from No. 25 MSG (min) galv steel, spaced 24 in. OC max.

2A. **Framing Members* - Steel Studs** — Not shown - In lieu of Item 2 — For use with Item 1A, proprietary channel shaped steel studs, 1-1/4 in. deep by min 3-5/8 in. wide fabricated from min 0.020 in. thick galv steel. Studs cut 3/8 in. less in length than assembly height. Spaced 24 in. OC max.

CALIFORNIA EXPANDED METAL PRODUCTS CO — Viper20™

MARINO/WARE, DIV OF WARE INDUSTRIES

INC — Viper20™

TELLING INDUSTRIES L L C — Viper20™

2B. **Framing Members*— Steel Studs** — Not shown - In lieu of Item 2 — For use with Item 1B, channel shaped steel studs, 1-1/4 in. deep by min 3-5/8 in. wide fabricated from min 0.018 in. thick galv steel. Studs cut 3/8 in. less in length than assembly height. Spaced 24 in. OC max.

CLARKDIETRICH BUILDING SYSTEMS — CD ProSTUD

DMFCWBS L L C — ProSTUD

MBA BUILDING SUPPLIES — ProSTUD

SOUTHEASTERN STUD & COMPONENTS INC — ProSTUD

TELLING INDUSTRIES L L C — TRUE-STUD™

3. **Batts and Blankets*** — (Optional, not shown) — Mineral wool or glass fiber batts partially or completely filling stud cavity.

See **Batts and Blankets** (BZJZ) category for names of Classified companies.

3A. **Fiber, Sprayed*** — As an alternate to **Batts and Blankets** (Item 3) — Spray applied cellulose material. The fiber is applied with water to completely fill the enclosed cavity in accordance with the application instructions supplied with the product. Nominal dry density of 3.0 lb/ft^3. Alternate application method: The fiber is applied with U.S. Greenfiber LLC Type AD100 hot melt adhesive at a nominal ratio of one part adhesive to 6.6 parts fiber to completely fill the enclosed cavity in accordance with the application instructions supplied with the product. Nominal dry density of 2.5 lb/ft^3.

U S GREENFIBER L L C — Cocoon2 Stabilized or Cocoon-FRM (Fire Rated Material)

3B. **Fiber, Sprayed*** — As an alternate to **Batts and Blankets** (Item 3) and Item 3A - Spray applied cellulose insulation material. The fiber is applied with water to interior surfaces in accordance with the application instructions supplied with the product. Applied to completely fill the enclosed cavity. Minimum dry density of 4.3 pounds per cubic ft.

NU-WOOL CO INC — Cellulose Insulation

3C. **Fiber, Sprayed*** — As an alternate to Batts and Blankets (Item 3) - Spray applied cellulose fiber. The fiber is applied with water to completely fill the enclosed cavity in accordance with the application instructions supplied with the product. The minimum dry density shall be 4.30 lbs/ft^3.

INTERNATIONAL CELLULOSE CORP — Celbar-RL

4. **Screws** — Type S self-tapping screws, 1-1/4 or 2 in. long, (1 Hr) and 2-1/2 in. long (2 Hr).

5. **Building Units* — For 1 Hr Rating** — Nom 5/8 or 3/4 in. thick, 4 ft wide, faced gypsum board panels with the faced side on the interior wall cavity. Panels attached to studs and floor and ceiling runners with screws spaced 8 in. OC along the edges of the panel and 12 in. OC in the field of the panel. Joints oriented vertically and staggered on opposite sides of the assembly.

MOMENTIVE PERFORMANCE MATERIALS — Type CoreGuard.

6. **Joint Tape and Compound** — (Not Shown) — Vinyl, dry or premixed joint compound, applied in two coats to joints and screw heads; paper tape, 2 in. wide, embedded in first layer of compound over all joints.

7. **Gypsum Board* — For 2 Hr Rating** — Nom. 5/8 in. thick), 4 ft wide, gypsum board applied over exterior face of Building Unit (Item 5). Gypsum board to be applied vertically with joints staggered 24 in. from Building Unit (Item 5) and attached to studs and floor and ceiling runners with screws spaced 8 in. OC.

Any UL Classified Gypsum Board that is eligible for use in Design Nos. L501, G512 or U305. See **Gypsum Board** (CKNX) Category for names of Classified companies.

*Bearing the UL Classification Mark

Last Updated on 2011-12-09

© 2012 UL LLC

The appearance of a company's name or product in this database does not in itself assure that products so identified have been manufactured under UL's Follow-Up Service. Only those products bearing the UL Mark should be considered to be Listed and covered under UL's Follow-Up Service. Always look for the Mark on the product.

UL permits the reproduction of the material contained in the Online Certification Directory subject to the following conditions: 1. The Guide Information, Designs and/or Listings (files) must be presented in their entirety and in a non-misleading manner, without any manipulation of the data (or drawings). 2. The statement "Reprinted from the Online Certifications Directory with permission from UL" must appear adjacent to the extracted material. In addition, the reprinted material must include a copyright notice in the following format: "© 2012 UL LLC".

MULLION 2125 N Bay

MIAMI-DADE COUNTY
DEPARTMENT OF PERMITTING, ENVIRONMENT, AND REGULATORY AFFAIRS (PERA)
BOARD AND CODE ADMINISTRATION DIVISION

MIAMI-DADE COUNTY
PRODUCT CONTROL SECTION
11805 SW 26 Street, Room 208
Miami, Florida 33175-2474
T (786) 315-2590 F (786) 315-2599
www.miamidade.gov/pera

NOTICE OF ACCEPTANCE (NOA)

Pino's Window Corporation
6860 NW 77 Terrace
Medley, FL 33166

SCOPE:
This NOA is being issued under the applicable rules and regulations governing the use of construction materials. The documentation submitted has been reviewed and accepted by Miami-Dade County PERA - Product Control Section to be used in Miami Dade County and other areas where allowed by the Authority Having Jurisdiction (AHJ).
This NOA shall not be valid after the expiration date stated below. The Miami-Dade County Product Control Section (In Miami Dade County) and/or the AHJ (in areas other than Miami Dade County) reserve the right to have this product or material tested for quality assurance purposes. If this product or material fails to perform in the accepted manner, the manufacturer will incur the expense of such testing and the AHJ may immediately revoke, modify, or suspend the use of such product or material within their jurisdiction. PERA reserves the right to revoke this acceptance, if it is determined by Miami-Dade County Product Control Section that this product or material fails to meet the requirements of the applicable building code.
This product is approved as described herein, and has been designed to comply with the Florida Building Code, including the High Velocity Hurricane Zone.

DESCRIPTION: Aluminum Tube Mullion – L.M.I.

APPROVAL DOCUMENT: Drawing No. **M95-18A**, titled "Aluminum Tube Mullions", sheets 1 through 4 of 4, dated 12/07/1995, with last revision D dated 02/20/2012, prepared by Al-Farooq Corporation, signed and sealed by Javad Ahmad, P.E., bearing the Miami-Dade County Product Control renewal stamp with the Notice of Acceptance number and expiration date by the Miami-Dade County Product Control Section.

MISSILE IMPACT RATING: Large and Small Missile Impact Resistant

LABELING: Each unit shall bear a permanent label with the manufacturer's name or logo, city, state, model/series, and following statement: "Miami-Dade County Product Control Approved", unless otherwise noted herein.

RENEWAL of this NOA shall be considered after a renewal application has been filed and there has been no change in the applicable building code negatively affecting the performance of this product.

TERMINATION of this NOA will occur after the expiration date or if there has been a revision or change in the materials, use, and/or manufacture of the product or process. Misuse of this NOA as an endorsement of any product, for sales, advertising or any other purposes shall automatically terminate this NOA. Failure to comply with any section of this NOA shall be cause for termination and removal of NOA.

ADVERTISEMENT: The NOA number preceded by the words Miami-Dade County, Florida, and followed by the expiration date may be displayed in advertising literature. If any portion of the NOA is displayed, then it shall be done in its entirety.

INSPECTION: A copy of this entire NOA shall be provided to the user by the manufacturer or its distributors and shall be available for inspection at the job site at the request of the Building Official.
This NOA **renews NOA # 08-0514.10** and consists of this page 1 and evidence page E-1, as well as approval document mentioned above.
The submitted documentation was reviewed by **Carlos M. Utrera, P.E.**

MIAMI-DADE COUNTY APPROVED

07/02/2012

NOA No. 12-0314.02
Expiration Date: March 28, 2017
Approval Date: July 12, 2012

NOTICE OF ACCEPTANCE: EVIDENCE SUBMITTED

A. DRAWINGS

1. Drawing No. **M95-18A**, titled "Aluminum Tube Mullions", sheets 1 through 4 of 4, dated 12/07/1995, with last revision D dated 02/20/2012, prepared by Al-Farooq Corporation, signed and sealed by Javad Ahmad, P.E.

B. TESTS *"Submitted under NOA # 08-0514.10"*

1. Test reports on 1) Uniform Static Air Pressure Test, Loading per FBC TAS 202-94
   2) Large Missile Impact Test per FBC, TAS 201-94
   3) Cyclic Wind Pressure Loading per FBC, TAS 203-94

   along with marked-up drawings and installation diagram of Aluminum Fixed Windows Mulled Together, prepared by Fenestration Testing Laboratory, Test Report No. **FTL-5562**, dated 03/29/2008, signed and sealed by Carlos S. Rionda, P.E.

C. CALCULATIONS

1. Anchor and mullion calculations, prepared by Al-Farooq Corporation., dated 01/30/2012, signed and sealed by Javad Ahmad, P.E.

   "Submitted under NOA # 07-0322.12"

2. Anchor and mullion calculations, prepared by Al-Farooq Corporation., dated 02/24/2007, signed and sealed by Humayoun Farooq, P.E.

D. QUALITY ASSURANCE

1. Miami-Dade Department of Permitting, Environment, and Regulatory Affairs (PERA)

E. MATERIAL CERTIFICATIONS

1. None.

F. STATEMENTS

1. Statement letter of code conformance to 2010 FBC and no financial interest issued by Al-Farooq Corporation, dated 01/30/2012, signed and sealed by Javad Ahmad, P.E.

   "Submitted under NOA # 08-0514.10"

2. Laboratory compliance statement issued by Fenestration Testing Laboratory, Inc., dated 03/29/2008, signed and sealed by Carlos S. Rionda, P.E.

07/02/2012

Carlos M. Utrera, P.E.
Product Control Examiner
NOA No. 12-0314.02
Expiration Date: March 28, 2017
Approval Date: July 12, 2012

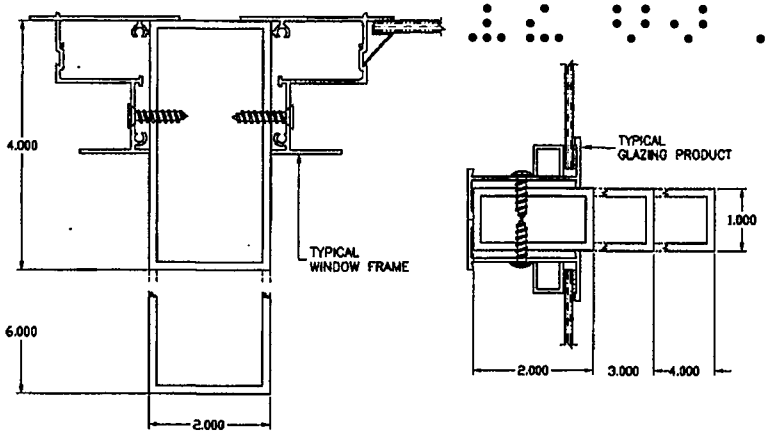

MULLIONS CONTAINING TYPICAL GLAZING PRODUCTS
HORIZONTAL OR VERTICAL

SEE WINDOW OR DOOR APPROVAL FOR FASTENERS SIZES AND SPACING

ALL MULLIONS 6063-T6 MIN.

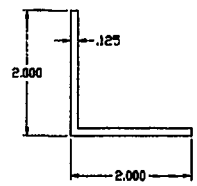

ANGLE CLIP (6063-T5)

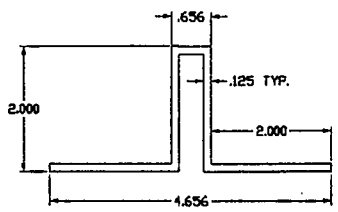

MULLION CLIP (6063-T6)
(ALT. TO ANGLES)
CLIP LENGTHS MUST BE CUT TO FIT SNUG INTO TUBE MULLIONS.

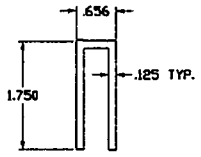

MULLION CLIP LEGS REMOVED

RECTANGULAR ALUMINUM TUBE MULLIONS
USING MULLION PROPERTIES ONLY

NOTES:

THIS PRODUCT HAS BEEN DESIGNED AND TESTED TO COMPLY WITH THE REQUIREMENTS OF THE FLORIDA BUILDING CODE INCLUDING HIGH VELOCITY HURRICANE ZONE (HVHZ).

ALL GLAZING PRODUCTS USED WITH THESE MULLIONS MUST MEET THE APPLICABLE BUILDING CODE REQUIREMENTS I.E: WIND LOAD, WATER INFILTRATION, FORCED ENTRY RESISTANCE, SAFEGUARDS ETC.

WOOD BUCKS BY OTHERS, MUST BE ANCHORED PROPERLY TO TRANSFER LOADS TO THE STRUCTURE.

ANCHORS SHALL BE AS LISTED, SPACED AS SHOWN ON DETAILS, EMBEDMENT TO BASE MATERIAL SHALL BE BEYOND WALL COVERING (STUCCO, TILE ETC.).

ANCHORING CONDITIONS OTHER THAN THOSE SHOWN IN THESE DETAILS ARE NOT PART OF THIS APPROVAL.

A LOAD DURATION INCREASE IS USED IN DESIGN OF ANCHORS INTO WOOD ONLY.

MATERIALS INCLUDING BUT NOT LIMITED TO STEEL/METAL SCREWS, THAT COME INTO CONTACT WITH OTHER DISSIMILAR MATERIALS SHALL MEET THE REQUIREMENTS OF THE FLORIDA BLDG. CODE SECTION 2003.8.4.

INSTRUCTIONS:

USE CHARTS AND GRAPHS AS FOLLOWS.

STEP 1 DETERMINE DESIGN LOAD REQUIRED PER ASCE 7 FOR PARTICULAR OPENING.

STEP 2 USE MIAMI-DADE COUNTY APPROVED GLAZING PRODUCTS MEETING ABOVE LOAD REQUIREMENTS.

STEP 3 USE CONNECTION TO MULLION AS PER PRODUCT APPROVAL.

STEP 4 USING GRAPHS ON SHEET 2 SELECT MULLION SIZE WITH DESIGN RATING MORE THAN DESIGN LOAD SPECIFIED IN STEP 1 ABOVE.

STEP 5 USING ANCHOR TYPES ON SHEET 4, AND ANCHOR GRAPHS ON SHEET 3, SELECT ANCHOR TYPE WITH DESIGN RATING MORE THAN THE DESIGN LOADS SPECIFIED IN STEP 1 ABOVE.

MULLION SYSTEM IS RATED FOR LARGE MISSILE IMPACT. AND CAN BE USED WITH ALL MIAMI-DADE COUNTY APPROVED IMPACT AND NON-IMPACT RESISTANT PRODUCTS.

Engr: JAVAD AHMAD
CML
FLA REG # 70592
C.A.N. 3538

PRODUCT RENEWED
as complying with the Florida Building Code
Acceptance No. 12-0314.02
Expiration Date 02/28/2017
By
Miami-Dade Product Control

FEB 2 2 2012

AL-FAROOQ CORPORATION
ENGINEERS & PRODUCT DEVELOPMENT
1236 S.W. 87 AVE
MIAMI, FLORIDA 33174
TEL. (305) 264-8100 FAX. (305) 262-6978

MULLION\M95-18A

ALUMINUM TUBE MULLIONS

PINO WINDOWS CORPORATION
6860 N.W. 75TH STREET
MEDLEY, FL. 33166
TEL. (305) 888-9946 FAX (305) 888-8079

revisions:

no	date	by	description
A	02.14.02	T.A.	SHEETS 2 & 3 REV.
B	02.26.07		UPDATED FOR 2004 FBC
C	05.05.08		MULL CLIP ADDED
D	02.20.12		UPDATED TO 2010 FBC

date: 12-07-95
scale: 1/2" = 1"
dr. by: HAMID
chk. by:

drawing no.
M95-18A

sheet 1 of 4

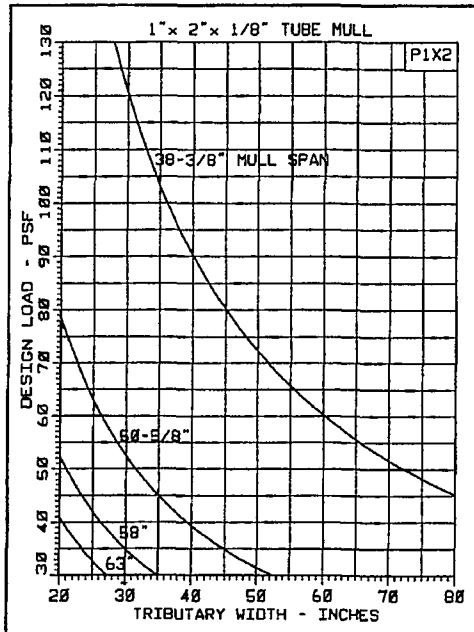

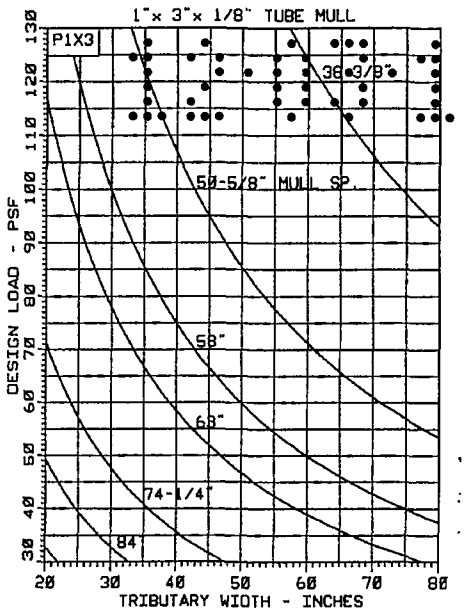

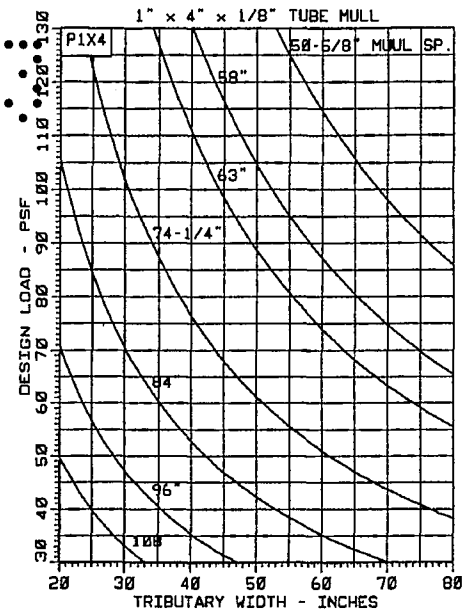

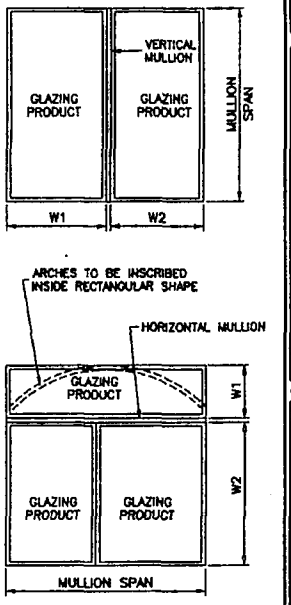

TYPICAL MULLION ARRANGEMENTS

$$\text{WIDTH (W)} = \frac{W1 + W2}{2}$$

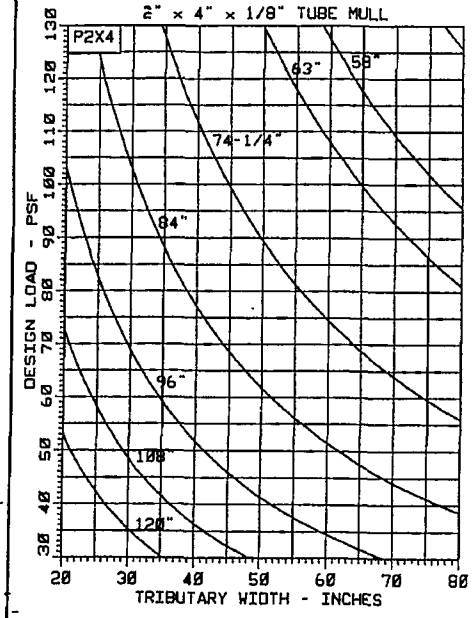

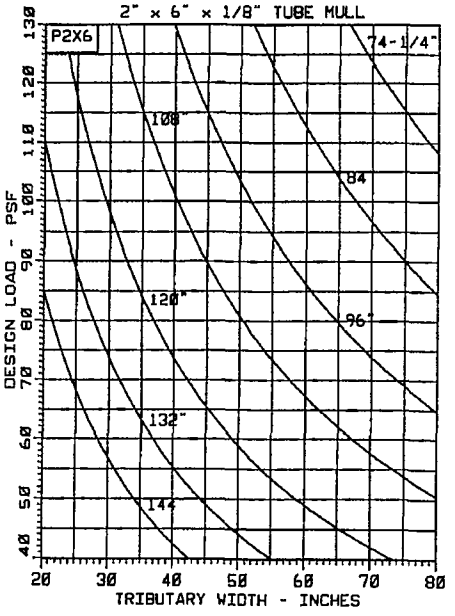

NOTE:
MULLIONS RATED IN THESE CHARTS MAY BE ORIENTED VERTICALLY OR HORIZONTALLY.
(INTERPOLATION BETWEEN WIDTHS ALLOWED)

PRODUCT RENEWED
as complying with the Florida Building Code
Acceptance No. 12-0314.02
Expiration Date 02/28/2017
By
Miami Dade Product Control

Engr: JAVAD AHMAD
CMIL
FLA. PE # 70892
C.A.N. 3538

FEB 22 2012

MULLIONS

AL-FAROOQ CORPORATION
ENGINEERS & PRODUCT DEVELOPMENT
1235 S.W. 87 AVE
MIAMI, FLORIDA 33174
TEL. (305) 264-8100 FAX. (305) 262-6978
MULLION\M95-18A

ALUMINUM TUBE MULLIONS

PINO WINDOWS CORPORATION
6860 N.W. 75TH STREET
MEDLEY, FL. 33166
TEL. (305) 888-9946 FAX. (305) 888-8079

revisions:			
no	date	by	description
A	02.14.01	T.H.	ANCHOR TYPE B CHART REV.
B	02.28.07		UPDATED FOR 2004 FBC
C	06.05.08		NO CHANGE THIS SHEET
D	02.20.12		NO CHANGE THIS SHEET

date: 12-07-95
scale: 1/2" = 1"
dr. by: HAMID
chk. by:

drawing no.
M95-18A

sheet 2 of 4

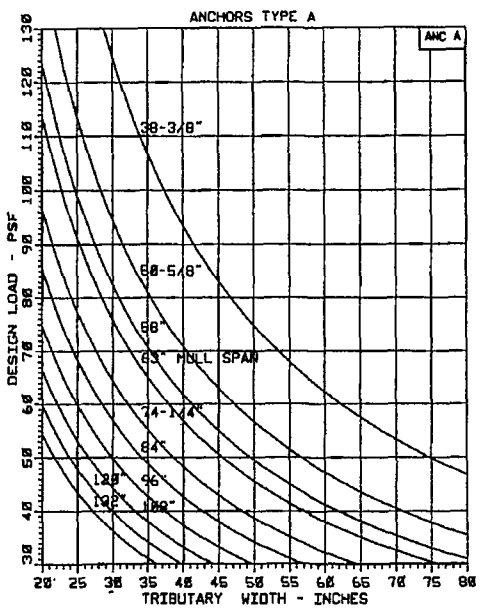

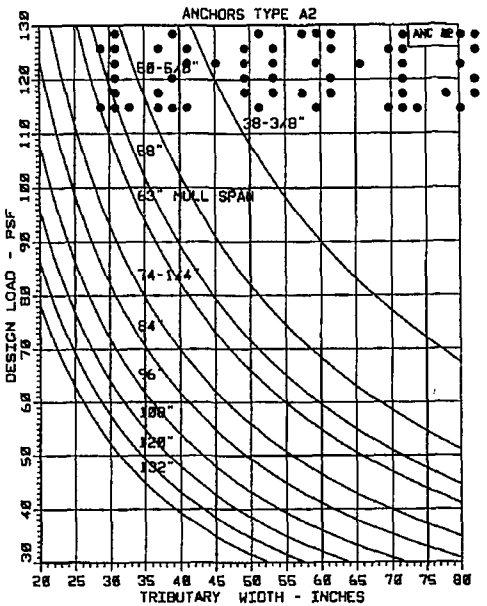

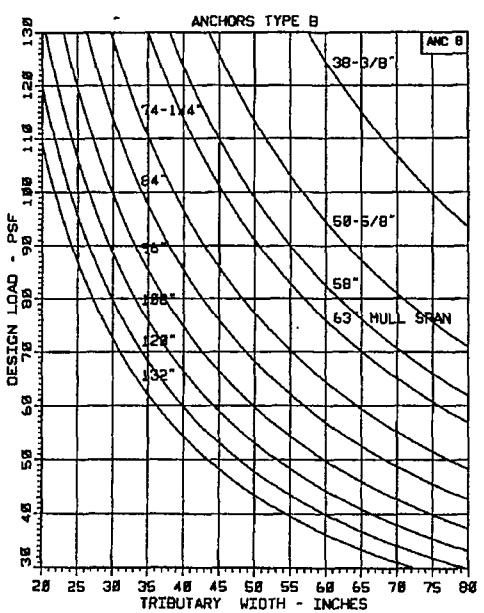

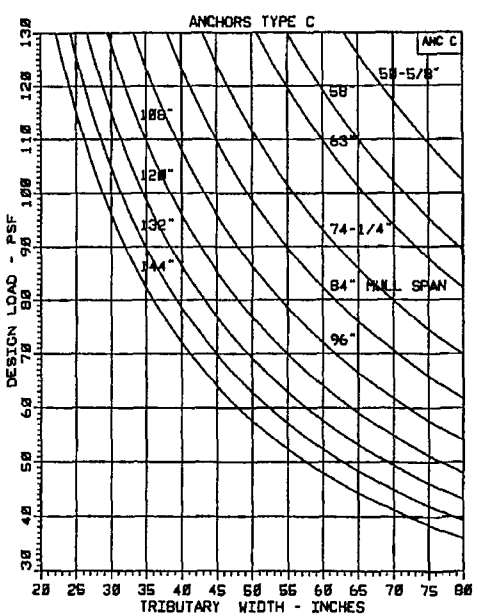

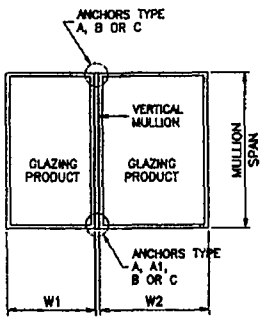

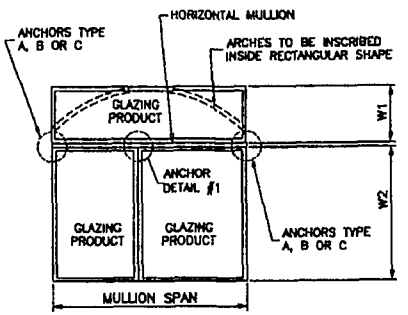

TYPICAL MULLION ARRANGEMENTS

$$\text{WIDTH (W)} = \frac{W1 + W2}{2}$$

PRODUCT RENEWED
as complying with the Florida
Building Code
Acceptance No 12-0314.02
Expiration Date 03/01/2017
By
Miami Dade Product Control

NOTE:
ANY ANCHOR CONDITION SHOWN HEREIN MAY COVER LOCATIONS AT HEAD, SILL OR JAMB ENDS.

FOR ANCHORS DESCRIPTION SEE SHEET 4.
(INTERPOLATION BETWEEN WIDTHS OR SPANS ALLOWED)

Engr: JAVAD AHMAD
CIVIL
FLA. PE # 70592
C.A.N. 3538

ANCHORS

FEB 2 2 2012

AL-FAROOQ CORPORATION
ENGINEERS & PRODUCT DEVELOPMENT
12235 S.W. 87 AVE
MIAMI, FLORIDA 33174
TEL. (305) 254-5100 FAX. (305) 252-6978

MULLION\M95-18A

ALUMINUM TUBE MULLIONS

PINO WINDOWS CORPORATION
6860 N.W. 75TH STREET
MEDLEY, FL 33166
TEL. (305) 888-9946 FAX (305) 888-8079

revisions:			
no	date	by	description
B	02.26.07		UPDATED FOR 2004 FBC
C	05.05.08		NO CHANGE THIS SHEET
D	02.20.12		ANCHOR CHARTS REV.

date: 12-07-95
scale: 1/2" = 1"
dr. by: HAMID
chk. by:

drawing no.
M95-18A

sheet 3 of 4

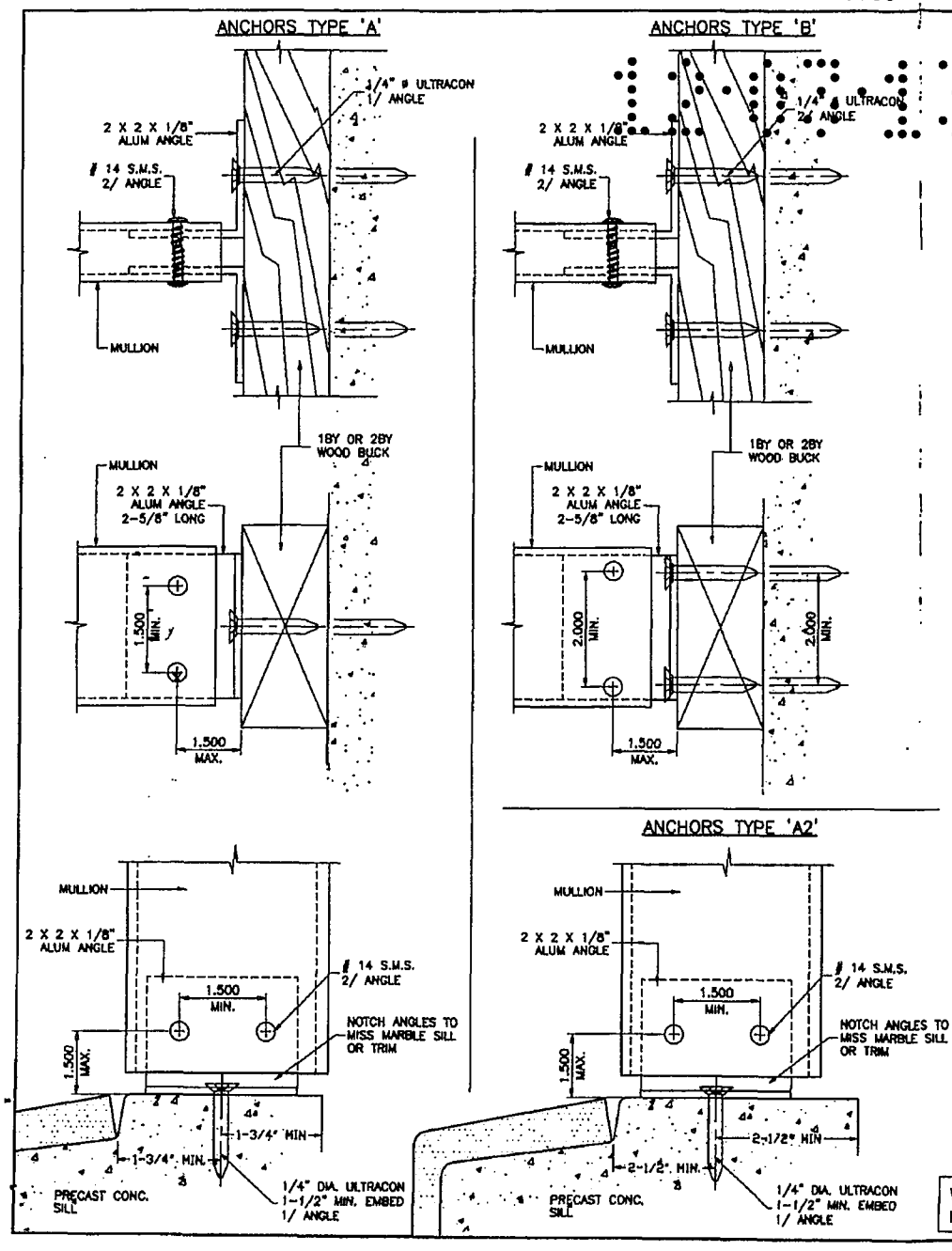

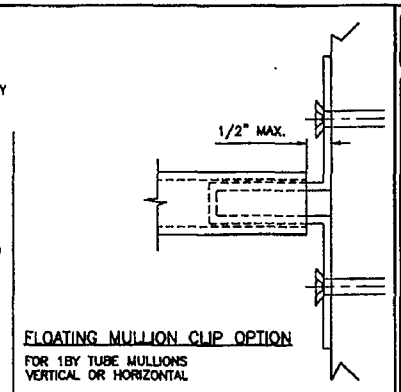

FLOATING MULLION CLIP OPTION

FOR 1BY TUBE MULLIONS VERTICAL OR HORIZONTAL

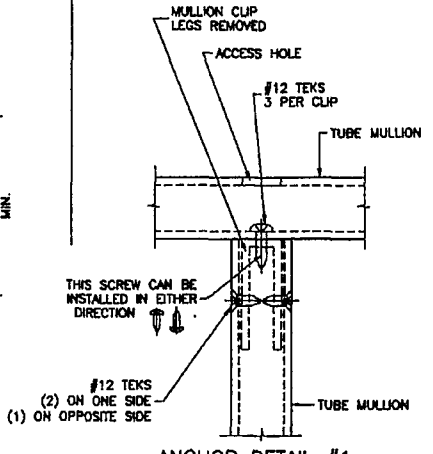

ANCHOR DETAIL #1

ULTRACON BY 'ELCO' (Fu=177 KSI, Fy=155 KSI)

INTO 2BY WOOD BUCKS OR WOOD STRUCTURES
1-3/8" MIN. PENETRATION INTO WOOD

THRU 1BY BUCKS INTO CONC. OR MASONRY
1-1/4" MIN. EMBED INTO CONC. OR MASONRY

ANCHOR EDGE DISTANCES:

INTO CONCRETE AND MASONRY = 2-1/2" MIN.
INTO WOOD STRUCTURE = 1" MIN.
INTO METAL STRUCTURE = 5/8" MIN.

WOOD BUCKS NOT BY PINO WINDOWS MUST SUSTAIN LOADS IMPOSED.

PRODUCT RENEWED as complying with the Florida Building Code Acceptance No. 12-0314.02 Expiration Date 03/28/2017 By Miami-Dade Product Control

Engr: JAVAD AHMAD CIVIL FLA. PE # 70592 C.A.N. 3538

FEB 2 2 2012

AL-FAROOQ CORPORATION
ENGINEERS & PRODUCT DEVELOPMENT
1235 S.W. 87 AVE
MIAMI, FLORIDA 33174
TEL. (305) 264-8100 FAX. (305) 262-6978
MULLION\M95-18A

ALUMINUM TUBE MULLIONS

PINO WINDOWS CORPORATION
6860 N.W. 75TH STREET
MEDLEY, FL. 33166
TEL. (305) 888-9946 FAX. (305) 888-8079

revisions: no.	date	by	description
A	02.14.02	T.H.	ANCHOR EMBEDMENT REV.
B	02.26.07		UPDATED FOR 2004 FBC
C	05.05.08		MULL CLIP ADDED
D	02.20.12		ANCHORS REV.

date: 12-07-95
scale: 1/2" = 1"
dr. by: HAMID
chk. by:

drawing no. M95-18A

sheet 4 of 4

2125 N. Bay DR.

11/9/2013

Y2

MECAWind Version 2.0.2.7

Detailed Wind Load Design (Method 2) per ASCE 7-10

Description: WINDOWS LOAD PREASURE
Analysis by: EMILIANO OROZCO

User Input Data		
Structure Type	Building	
Basic Wind Speed (V)	175	mph
Struc Category (I, II, III, or IV)	II	
Exposure (B, C, or D)	C	
Struc Nat Frequency (n1)	1	Hz
Slope of Roof	3.0	:12
Slope of Roof (Theta)	14.0	Deg
Type of Roof	Gabled	
Kd (Directonality Factor)	0.85	
Eave Height (Eht)	9.40	ft
Ridge Height (RHt)	13.50	ft
Mean Roof Height (Ht)	11.60	ft
Width Perp. To Wind Dir (B)	52.30	ft
Width Paral. To Wind Dir (L)	51.00	ft

Calculated Parameters		
Importance Factor	1	
Hurricane Prone Region (V>100 mph)		
Table 6-2 Values		
Alpha =	9.500	
zg =	900.000	
At =	0.105	
Bt =	1.000	
Bm =	0.650	
Cc =	0.200	
l =	500.00	ft
Epsilon =	0.200	
Zmin =	15.00	ft

Calculated Parameters	
Type of Structure	
Height/Least Horizontal Dim	0.23
Flexible Structure	No

Gust Factor Category I: Rigid Structures - Simplified Method			
Gust1	For rigid structures (Nat Freq > 1 Hz) use 0.85	0.85	
Gust Factor Category II: Rigid Structures - Complete Analysis			
Zm	Zmin	15.00	ft
Izm	Cc * (33/z)^0.167	0.2281	
Lzm	l*(zm/33)^Epsilon	427.06	ft
Q	(1/(1+0.63*((Min(B,L)+Ht)/Lzm)^0.63))^0.5	0.9175	
Gust2	0.925*((1+1.7*Izm*3.4*Q)/(1+1.7*3.4*Izm))	0.8816	
Gust Factor Summary			
G	Since this is not a flexible structure the lessor of Gust1 or Gust2 are u	0.85	

Fig 6-5 Internal Pressure Coefficients for Buildings, Gcpi

Condition	Gcpi	
	Max +	Max -
Open Buildings	0.00	0.00
Partially Enclosed Buildings	0.55	-0.55
Enclosed Buildings	0.18	-0.18
Enclosed Buildings	**0.18**	**-0.18**

Copyright 2013

2/2

MECAWind Version 2.0.2.7

Detailed Wind Load Design (Method 2) per ASCE 7-10

Figure 6-11 - External Pressure Coefficients, GCp

Loads on Components and Cladding for Buildings w/ Ht <= 60 ft

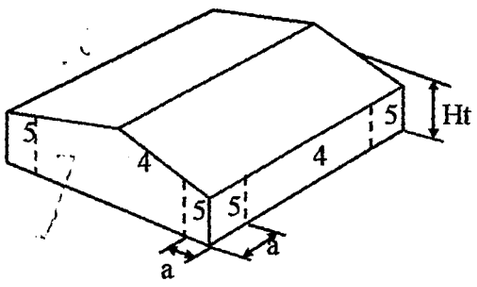

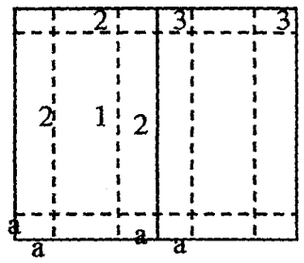

Gabled Roof
7 < Theta <= 45

a = 4.64 ==> 4.64 ft

Double Click on any data entry line to receive a help Screen

Component	Width (ft)	Span (ft)	Area (ft^2)	Zone	GCp Max	GCp Min	Wind Press (lb/ft^2) Max	Wind Press (lb/ft^2) Min
A-DOUBLE SH	7.66	4.25	32.56	4	0.91	-1.01	41.32	-57.45
B- DOUBLE SH	6.17	4.25	26.22	4	0.93	-1.03	40.25	-56.32
C-TRIPLE SH	9.42	4.25	40.04	4	0.89	-0.99	41.25	-57.45

Note: * Enter Zone 1 through 5, or 1H through 3H for overhangs.

MIAMIBEACH

Plan Routing Sheet

General Information		
Date 12/05/13	Process/Permit Number **Re-Submittals Only** B1400599	Historic (Y/N)
Job Address 2125 Bay Dr.		
Contact Name Magaly Fonseca	E-mail	Telephone 786-663-8107

Re-submittals - New Sheets: ☐ **Yes** ☒ **No**

List all new sheets:

OFFICE USE ONLY

Required Approvals - As Indicated		
☐ Planning & Zoning	☐ Fire	☐ Public Works
☐ Flood Plain Management	☒ Building	☐ Structural
☐ Electrical	☐ Mechanical	☐ Plumbing
☐ Elevator		

Comments:

Reviewer: [signature] Date: 12/05/13

☒ **Walk Thru** ☐ **Drop Off**

FIRE REPAIR DONE WITHOUT PERMIT TO BE LEGALIZED

Bl-10390

NO.	REVISIONS
1	REVISION 11-11-2013
2	
3	

ZONING INFORMATION

ZONING CLASS: MULTI FAMILY 3900 △1
PROPOSED USE: RESIDENTIAL

LOT AREA: 7,789 SQ FT

BUILDING AREAS:	
TOTAL ADJS. BUILDING AREA	2,255 S.F.
TOTAL REMOD..	252 SF (11.17%) △1 LEVEL 2 ALTERATION-SECTION 404 – 2010 FBC

BUILDING SETBACKS	REQUIRED	PROVIDED
FRONT SETBACK:	25' MIN.	26.40'
INTERIOR SIDE SETBACK:	5' MIN.	5.38'
SIDE STREET SETBACK:	5' MIN.	9.99'
REAR SETBACK:	25' MIN.	36.52'

LEGAL DESCRIPTION:

PROPERTY ADDRESS: 2125 BAY DR., MIAMI BEACH, FLORIDA, 33141
Legal Description: MIAMI VIEW SEC-ISLE OF NORMANDY PART 3 PB 40-33 LOT 8 BLK 41 LOT SIZE 55.640 X 140 OR 18522-2792 03 1999 1 COC 26277-2048 02 2008 5

DEMOLITION GENERAL NOTES:

A DURING THE PROCESS OF DEMOLITION AND RETROFIT, THE BUILDING SHALL REMAIN PROTECTED FROM THE ELEMENTS TO AVOID DAMAGE BY WATER, WIND OR HUMIDITY.

B THE PROCESS OF REMOVAL SHALL BE ACCOMPANIED BY A PROCESS OF CLEANING OF THE REMAINING ELEMENT SO AS TO ALLOW PROPER REPAIR AND/OR REPLACEMENT DURING CONSTRUCTION.

C GENERAL CONTRACTOR SHALL VERIFY ALL DIMENSIONS AND CONDITIONS. ANY DISCREPANCIES SHALL BE BROUGHT TO THE ENGINEER'S ATTENTION PRIOR TO START OF CONSTRUCTION. ANY CONDITION NOT BROUGHT TO THE ATTENTION OF THE AENGINEER PRIOR TO BID SHALL BE THE RESPONSIBILITY OF THE GENERAL CONTRACTOR.

D GENERAL CONTRACTOR TO FIELD VERIFY LOCATION OF ALL UTILITIES PRIOR TO ANY DEMOLITION. (I.E. WATER, SEWER, FPL, ETC.)

E CONTRACTOR TO LOCATE ALL EXISTING INSTALLATIONS THAT WILL PREVENT THE CONSTRUCTION OF THE INTENDED ITEMS, OR REQUIRE THE MODIFICATION OF CEILING HEIGHTS.

F GENERAL CONTRACTOR TO PATCH AND REPAIR ALL SURFACES THAT BECOME AFFECTED DURING CONSTRUCTION.

G ALL SALVAGABLE MATERIALS TO BE REMOVED AND STORED BY CONTRACTOR ACCORDING TO OWNER'S REQUEST.

I ITEMS TO BE REMOVED OR RELOCATED SHALL VE DONE IN A SAFE, ORDERLY MANNER WITHOUR DAMAGE TO OTHER PARTS OF THE PREMISES OR ADJACENT PROPERTIES, ANY RESULTING DAMAGE OR LOSS SHALL BE CORRECTED OR REPLACED BY CONTRACTOR.

J LOCATION OF DUMPSTER AND WORK PROCEDURES ARE TO BE COORDINATED WITH PROPERTY MANAGEMENT OR OWNER.

K CONTROL, AS MUCH AS PRACTICAL, THE SPREAD OF DUST AND DIRT.

L VERIFY THAT ALL APPROPRIATE UTILITIES HAVE BEEN DISCONNECTED AND PROPERLY CAPPED TO INSURE SAFETY.

M CONTRACTOR IS RESPONSIBLE FOR PROMPT DISPOSAL OF MATERIALS RESULTING FROM DEMOLITION OPERATIONS AND IS TO ENSURE THAT SUCH MATERIALS DO NOT ACCUMULATE ON SITE.

N TRANSPORT MATERIALS RESULTING FROM DEMOLITION OPERATIONS AND LEGALLY DISPOSE OF OFF SITE.

O UPON COMPLETION OF DEMOLITION OPERATIONS, REMOVE ALL TOOLS, EQUIPMENT AND DEBRIS LEAVING ALL AREAS (EXT.&INT.) CLEAN AND PREPARED FOR NEW CONSTRUCTION.

P REPAIR ANY AND ALL DAMAGE OBJECTS THAT WHERE NOT SUPPOSED TO BE DAMAGED DURING THE DEMOLITION PHASE TO CONDITION PRIOR TO DEMOLITION.

Q ALL DEMOLISHED MATERIAL SHALL BECOME CONTRACTOR'S PROPERTY AND SHALL BE DISPOSED OF BY CONTRACTOR.

R THE PURPOSE OF ARCHITECTURAL DEMO DRAWINGS IS FOR SCOPE OF WORK ONLY.

SCOPE OF WORK

GET PERMIT FOR INTERIOR REMODELING DONE DUE FIRE : CASE NUMBER BV09001124

△2 BUILDING:
–TO BE LEG. WINDOWS INSTALLED WITHOUT PERMIT.
–TO BE PROVIDED NEW SHUTTERS FOR THE WINDOWS.
–TO BE LEG. TILE FLOOR.
–TO BE LEG. BATHROOM REMODELED.

△2 ELECTRICAL:
–TO BE PROVIDED SMOKE DETECTOR.

GENERAL NOTES:

1.– ALL WORK SHALL BE IN ACCORDANCE WITH THE LATEST EDITION OF THE FLORIDA BUILDING CODE AND WITH THE REQUIREMENTS OF THE MIAMI DADE COUNTY, STATE & NATIONAL LAWS AND CODES, ANY DISCREPANCIES BETWEEN THE PLANS AND ABOVE REQUIREMENTS MUST BE CALL TO THE A/E'S ATTENTION BEFORE PROCEEDING WITH THE WORKS. THE CONTRACTOR SHALL VERIFY ALL DIMENSIONS AND CONDITIONS IN THE PLANS.

2.– HE MUST FAMILIARIZE HIMSELF WITH THE CONTRACT DOCUMENTS BEFORE PROCEEDING WITH THE WORK AND REPORT TO A/E TO CLARIFY ANY DISCREPANCIES; CONTRACTOR MUST COORDINATE THE WORK OF ALL TRADES AND INSURE THAT ALL WORK CAN BE COMPLETE AS IT IS THE INTENT OF THE PLANS.

3.– CONTRACTOR SHALL OBTAIN ALL REQUIRED PERMITS, INCLUDING SUBCONTRACTOR'S PERMITS, INSPECTIONS AND APPROVALS FROM GOVERNING AGENCIES WITH JURISDICTION OVER THE PROJECT BEFORE BEGINNING WORK.

4.– ALL WORK PERFORMED UNDER THIS CONTRACT SHALL COMPLY WITH THE REQUIREMENTS OF THE UTILITY COMPANIES INCLUDING THE CITY OF MIAMI DADE COUNTY PUBLIC WORKS DEPARTMENT, WHOSE SERVICES SHALL BE USED. ALL MANUFACTURERS SHALL SUBMIT SHOP DRAWINGS TO THE A/E.

5.– FOR APPROVAL PRIOR TO FABRICATION. THE A/E WILL NOT BE RESPONSIBLE FOR CONSTRUCTION MEANS,

6.– METHODS, TECHNIQUES, SEQUENCES OR PROCEDURES, OR FOR SAFETY PRECAUTIONS AND PROGRAMS IN CONNECTION WITH THE WORK, AND HE WILL NOT BE RESPONSIBLE FOR THE CONTRACTOR'S FAILURE TO CARRY OUT THE WORK IN ACCORDANCE WITH THE INTENT OF THE CONTRACT DOCUMENTS.

7.– ALL MATERIAL AND WORKMANSHIP SHALL MEET THE REQUIREMENTS OF THE APPLICABLE STANDARD SPECIFICATION OF THE AMERICAN SOCIETY FOR TESTING AND MATERIALS.

8.– THE GENERAL CONTRACTOR MAY SUBSTITUTE EQUIPMENT AND/OR MATERIALS AS LONG AS SUCH CHANGES MEET ALL F.B. CODE REQUIREMENTS ARE EQUAL TO THOSE SPECIFIED ON PLANS AND OBTAINS OWNER'S APPROVAL IN WRITING.

9.– CONTRACTOR SHALL SUBMIT DADE COUNTY PRODUCT CONTROL APPROVAL ROOFING & WATER PROOFING COMPONENTS AND ALL OTHER FOR WINDOWS, PRODUCTS REQUIRING SAID APPROVAL.

10.– WORKMANSHIP: ALL WORK SHALL BE PERFORMED IN A MANNER CONSISTENT WITH THE BEST PRACTICES FOR THE RESPECTIVE TRADES AND QUALITY SPECIFIED. WORK NOT CONSISTENT WITH THE TRADE HIGHEST LEVEL OF WORKMANSHIP WILL BE REJECTED. ANY WORK REJECTED SHALL BE REDONE AT CONTRACTOR'S EXPENSE. CORRECTION OF DEFECTIVE WORK SHALL BE STARTED NOT LATER THAN FIVE DAYS AFTER NOTICE IS GIVEN THE CONTRACTOR, AND SHALL PROCEED WITHOUT DELAY UNTIL WORK IS COMPLETED.

11.– CLEANUP: THE CONTRACTOR AND ALL TRADES SHALL AT ALL TIMES KEEP THE PREMISES CLEAN OF DEBRIS ARISING OUT OF THE WORK AND FREE FROM ACCUMULATIONS OF WASTE MATERIALS OR RUBBISH CAUSED BY HIS OPERATIONS OR OTHER TRADES. THE CONTRACTOR SHALL PROVIDE AT ALL TIMES A TRASH CONTAINER ADEQUATE FOR THIS JOB. THE CONTRACTOR SHALL DELIVER ALL WORK UPON COMPLETION OF THE JOB IN A CLEAN, READY-TO-USE CONDITION. ALL FINISHED SURFACES SHALL HAVE PROTECTIVE COVERINGS REMOVED, AND SURFACES CLEANED OF ALL MARKS, STAINS, SOIL, PAINT, OR ADHESIONS OF OTHER MATERIALS AND LEFT IN PERFECT CONDITION.

Folio No.: 02-3210-011-0730
Property: 2125 BAY DR
Property Information:
Primary Zone: 3900 MULTI-FAMILY – 38-62 U/A
CLUC: 0002 MULTIFAMILY 2 LIVING UNITS
Beds/Baths: 0/0
Floors: 1
Living Units: 2
Adj Sq Footage: 2,255
Lot Size: 7,789 SQ FT
Year Built: 1940

GENERAL NOTES

1. THE CONTRACTOR SHALL VERIFY ALL DIMENSIONS, ELEVATIONS AND ANGLES AND ALL OTHER EXISTING CONDITIONS PRIOR TO COMMENCING ANY WORK.
CONTRACTOR TO ALSO VERIFY AND APPROVE ALL INFORMATION ON DRAWINGS. ACCEPTANCE OF THESE PLANS CONSTITUTES APPROVAL.
PLEASE NOTIFY ENGINEER BY CERTIFIED MAIL OF ANY CONFLICTS OR DISCREPANCIES, IF ANY.
2. THE CONTRACTOR SHALL OBTAIN FROM ALL SUBCONTRACTORS THE FINAL APPROVED SITE AND LOCATION OF ALL OPENINGS AND RELATED JOB'S CIRCUNSTANCES TO BE PROVIDED FOR RESPECTIVE TRADES. HE SHALL BE RESPONSIBLE FOR LOCATION AND DETAILS.
3. OWNER AND CONTRACTOR SHALL NOTIFY ENGINEER IN WRITING, BY CERTIFIED MAIL UPON COMMENCEMENT OF PROJECT.
4. THE OWNER SHALL BE SOLELY RESPONSIBLE FOR INVESTIGATION IN REFERENCE TO WHETHER STRUCTURE CAN BE BUILT ON SITE.

PLEASE NOTE – IT IS THE RESPONSIBILITY OF THE CONTRACTOR TO FIELD VERIFY ALL JOB CONDITIONS AND DIMENSIONS.

ENGINEER/INSPECTION DISCLAIMER:

THE PRESENCE OR NOT PRESENCE OF THE ENGINEER/INSPECTOR AT THE WORK SITE SHALL IN NO WAY LESSEN THE CONTRACTOR RESPONSIBILITY FOR CONFORMITY WITH CONTRACT, PLANS, SPECIFICATIONS, FLORIDA BUILDING CODE AND OSHA REGULATIONS. SHOULD THE ENGINEER OR INSPECTOR PRIOR TO, DURING OR AFTER CONSTRUCTION FAIL TO IDENTIFY OR REJECT MATERIALS OR WORK THAT DOES NOT CONFORM WITH THE ABOVE DOCUMENTS, WHETHER FROM LACK OF DISCOVERY OR FOR ANY OTHER REASON IT SHALL IN NO WAY PREVENT LATER REJECTION AND CORRECTION OF THE UNSATISFACTORY MATERIALS OR WORK WHEN DISCOVERED. THIS IS ALSO TRUE IF THE WORK HAS BEEN ACCEPTED AND IS CURRENTLY BEING MAINTAINED BY THE COUNTY OR CITY JURISDICTION. THE CONTRACTOR SHALL BE RESPONSIBLE FOR CORRECTION OF ALL WORK THAT DOES NOT CONFORM TO THE GOOD ENGINEERING PRACTICES AND THE DOCUMENTS MENTIONED ABOVE.

CONSTRUCTION REQUIREMENT:

ALL PUBLIC AND PRIVATE WORK INCLUDING BUT NOT LIMITED TO WATER MAINS, WATER SERVICES, SANITARY SEWERS, SANITARY SEWER SERVICES, STORM SEWERS, DRAINAGE SYSTEMS, ROADS, SIDEWALKS, PARKING LOTS, SITE GRADING AND LANDSCAPING SHALL BE CONSTRUCTED IN ACCORDANCE WITH THE CITY OR COUNTY WHERE THE JOB IS PERFORMED ORDINANCES, STANDARDS, SPECIFICATIONS, AND DETAILS THAT APPLICABLE. NO DEVIATIONS FROM THE OWNER/DEVELOPER OR CONTRACTOR'S SUBMITTED PLANS WILL BE ALLOWED UNLESS WRITTEN APPROVAL FROM THE CITY OR COUNTY WHERE THE JOB IS PERFORMED IS RECEIVED, ALONG WITH PERMISSION FROM THE CITY OR COUNTY WHERE THE JOB IS PERFORMED FOR WATER AND SANITARY SEWER DEVIATIONS. ALL PUBLIC AND PRIVATE EASEMENTS SHALL BE RECORDED PRIOR TO FINAL ACCEPTANCE BY THE CITY OR COUNTY WHERE THE JOB IS PERFORMED.

ARCHITECTURAL NOTES

- THE CONTRACTOR SHALL INSPECT ALL EXISTING CONDITIONS, VERIFY ALL ON SITE DIMENSIONS, EQUIPMENT AND BUILDING SERVICE REQUIREMENTS PRIOR TO COMMENCEMENT OF WORK. ORIGINAL BUILDING PLANS SHOULD BE REVIEWED TO ASSESS THE ENTIRE SCOPE OF THE PROJECT.
- THE CONTRACTOR SHALL BE RESPONSIBLE FOR COORDINATION WITH ALL OTHER TRADES INCLUDING THE EXISTING STRUCTURAL ELEMENTS OF THE BUILDING
- THE CONTRACTOR SHALL PROVIDE ALL ELEMENTS OF THE SYSTEMS AS INTENDED BY THE DESIGN TO RESULT IN COMPLETE AND WORKABLE SYSTEMS IN ACCORDANCE WITH ALL STATE AND LOCAL CODES, SAFETY STANDARDS AND GOVERNING ORDINANCES.
- ALL FINISH MATERIALS CHOSEN FOR THIS SPACE WILL BE DETERMINED BY CHOICE OF OTHERS
- ALL CONSTRUCTION SHALL CONFORM TO ALL CODE REGULATIONS AND RESTRICTIONS HAVING JURISDICTION
- THE CONTRACTOR SHALL BE RESPONSIBLE FOR REMOVAL OF ALL DEBRIS FROM PROJECT SITE
- DRAWINGS ARE DIAGRAMMATIC. DO NOT SCALE FOR EXACT LOCATION OF OPENINGS, FIXTURES, EQUIPMENT, ETC. WITH PROGRESS OF THE CONSTRUCTION.
- ALL WORK SHALL BE COORDINATED WITH OTHER TRADES TO AVOID INTERFERENCE
- REQUIRED INSURANCE SHALL BE PROVIDED BY CONTRACTOR FOR PROTECTION AGAINST PUBLIC LIABILITY AND PROPERTY DAMAGE FOR THE DURATION OF THE WORK
- CONTRACTOR SHALL SECURE AND PAY FOR ALL PERMITS, FEES, INSPECTIONS AND TESTS.
- CONTRACTOR SHALL VERIFY ALL DIMENSIONS ON JOB PRIOR TO BEGINNING CONSTRUCTION.
- DIMENSIONS SHALL TAKE PRECEDENCE OVER DRAWINGS.

BOUNDARY SURVEY

LEGAL DESCRIPTION:
LOT 8, OF BLOCK 41, IN "MIAMI VIEW SECTION-ISLE OF NORMANDY PART 3," ACCORDING TO THE PLAT THEREOF, AS RECORDED IN PLAT BOOK 40, AT PAGE 33, OF THE PUBLIC RECORDS OF MIAMI-DADE COUNTY, FLORIDA.

PROPERTY ADDRESS:
FOLIO No. 02-3210-011-0730
2125 BAY DRIVE
MIAMI BEACH, FL 33141

CERTIFIED TO:
- ANA MARIA OLIN

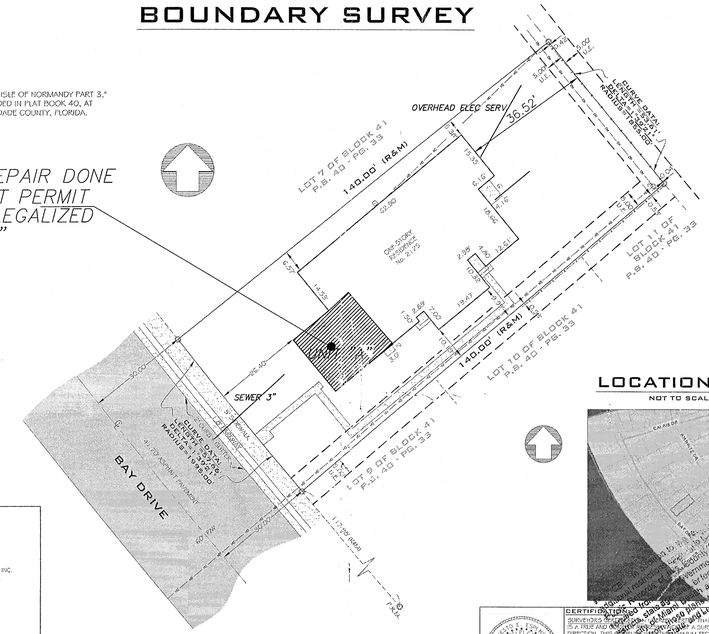

GENERAL NOTES:
LEGAL DESCRIPTION PROVIDED BY OTHERS.
EXAMINATION OF THE ABSTRACT OF THE TITLE WILL HAVE TO BE MADE TO DETERMINE RECORDED INSTRUMENTS, IF ANY.
THE LANDS SHOWN HEREON WERE NOT ABSTRACTED FOR EASEMENT OR OTHER RESTRICTIONS.
ENCUMBERANCES NOT SHOWN ON THE PLAT.
THE WRITTEN CONSENT OF LANDMARK SURVEYING & ASSOCIATES, INC. UNDERGROUND PORTIONS OF FOOTING, FOUNDATIONS OR OTHER IMPROVEMENTS WERE NOT LOCATED.
ONLY VISIBLE AND ABOVE GROUND ENCROACHMENTS LOCATED.
WALL TIES ARE THE FACE OF THE WALL.
FENCE OWNERSHIP NOT DETERMINED.
BEARINGS REFERENCED TO LINE NOTED AS B.R.
BOUNDARY SURVEY MEANS A DRAWING AND/OR GRAPHIC REPRESENTATION OF THE SURVEY WORK PERFORMED IN THE FIELD, COULD BE DRAWN AT A SHOWN SCALE AND/OR NOT TO SCALE.
NO IDENTIFICATION FOUND ON PROPERTY CORNERS UNLESS NOTED.
NOT VALID UNLESS SEALED WITH THE SIGNING SURVEYORS EMBOSSED SEAL.
DIMENSIONS SHOWN ARE PLAT AND MEASURED UNLESS OTHERWISE SHOWN.
ELEVATIONS IF SHOWN ARE BASED UPON N.G.V.D. 1929 UNLESS OTHERWISE NOTED.
THIS IS A BOUNDARY SURVEY UNLESS OTHERWISE NOTED.
THIS BOUNDARY SURVEY HAS BEEN PREPARED FOR THE EXCLUSIVE USE OF THE PERSONS NAME HEREON. THE CERTIFICATIONS DO NOT EXTEND TO ANY UNNAMED PARTIES.

LOCATION MAP

NOT TO SCALE

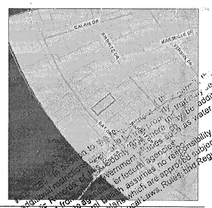

CERTIFICATE:
SURVEYORS NOTES: NOTE: THIS IS NOT A LEGAL SURVEY. THIS FINAL SURVEY IS A BREAKDOWN OF THE MIAMI DADE COUNTY PREPARED LANDS MY DIRECTION. THIS SURVEY WAS PREPARED IN ACCORDANCE WITH THE MINIMUM TECHNICAL STANDARDS, AS SET FORTH BY THE BOARD OF PROFESSIONAL LAND SURVEYORS CHAPTER 5J-17, FLORIDA ADMINISTRATIVE CODE.

SEAL — No. 2949 — STATE OF FLORIDA — PROFESSIONAL SURVEYOR & MAPPER

SIGNED: FOR THE FIRM
FAWAZ E. ZERKZEH P.S.M. No. 2949 STATE OF FLORIDA
NOT VALID WITHOUT AN AUTHENTIC ELECTRONIC SIGNATURE AND AUTHENTICATE ELECTRONIC SEAL AND/OR THIS MAP IS NOT VALID WITHOUT THE SIGNATURE AND THE ORIGINAL RAISED SEAL OF A LICENSE SURVEYOR AND MAPPER.

SITE PLAN

SCALE: 3/16" = 1'-0"

☐ EXISTING HOUSE.

OFFICE COPY
CITY OF MIAMI BEACH
APPROVED FOR PERMIT BY THE FOLLOWING:

BUILDING:	12/5/13
ZONING:	11/21/13
PLUMBING:	11/21/13 12/12/13
ELECTRICAL:	11/21/13
MECHANICAL:	
FIRE PREVENTION:	
FLOOD:	12-03-13
PUBLIC WORKS:	
STRUCTURAL:	12/2/13
ELEVATOR:	

EMILIANO OROZCO
PE66341
817 SW 122 AVE
MIAMI , FL, 33184
PHONE: (786)-715-7125

PROJECT: FIRE REPAIR DONE WITHOUT PERMIT TO BE LEG.
ADDRESS: 2125 BAY DRIVE, (APT. "A") MIAMI BEACH, FL 33141
OWNER INFORMATION: ANA MARIA OLIN/JIMMY CARRILLO
SHEET TITLE: SITE PLAN

SEAL

DATE	10-01-2013
SCALE	AS SHOWN
DESIGNED	
DRAWN	BEST PLANS SERVICES.
CHECKED	
DRAWING NO.	A-1

SCOPE OF WORK

GET PERMIT FOR INTERIOR REMODELING DONE DUE FIRE :
CASE NUMBER BV09001124

1. BUILDING:
   - TO BE LEG. WINDOWS INSTALLED WITHOUT PERMIT.
   - TO BE PROVIDED NEW SHUTTERS FOR THE WINDOWS.
   - TO BE LEG. TILE FLOOR.
   - TO BE LEG. BATHROOM REMODELED.
2. ELECTRICAL:
   - TO BE PROVIDED SMOKE DETECTOR.

NOTE

NO STRUCTURAL AND NO MECHANICAL WORKS TO BE PERFORMED.

NO PIPPINS WERE AFFECTED WITH THE REMODELING

ALTERATION LEVEL

SECTION 404 ALTERATION–LEVEL 2

404.1 SCOPE. LEVEL 2 ALTERATIONS INCLUDE THE RECONFIGURATION OF SPACE, THE ADDITION OR ELIMINATION OF ANY DOOR OR WINDOW, THE RECONFIGURATION OR EXTENSION OF ANY SYSTEM, OR THE INSTALLATION OF ANY ADDITIONAL EQUIPMENT.

404.2 APPLICATION. LEVEL 2 ALTERATIONS SHALL COMPLY WITH THE PROVISIONS OF CHAPTER 6 FOR LEVEL 1 ALTERATIONS AS WELL AS THE PROVISIONS OF CHAPTER 7.

DEMOLITION NOTE:

1– CONSULT WITH OWNER BEFORE PRIOR COMMENCEMENT OF DEMOLITION WORK.
2– ALL DEMOLITION WORK SHALL BE COORDINATED WITH PLUMBING AND ELECTRICAL PLANS STRICTLY.
3– ALL ELECTRICAL, PLUMBING & MECHANICAL DUCTS OR PIPES AFFECTED SHALL BE REINSTALLED SAME WAY AS IT WAS.

ALL WORK COMPLY WITH F.B.C. 2010.

MATERIALS REMOVED:
REMOVED REGULAR TILES ON FLOOR.
REMOVED SOME DRYWALL .
REMOVED PLUMBING FIXTURES

ZONING CLASS:	MULTI FAMILY 3900
PROPOSED USE:	RESIDENTIAL
OCCUPANCY GROUP:	RESIDENTIAL
LOT AREA:	7,789 SQ FT

DEMOLITION:

1. ORGANIZE AND PERFORM DEMOLITION WORK TO AVOID DAMAGE TO CONSTRUCTION INTENDED TO REMAIN.
2. DEMOLITION AND TRANSPORTATION OF DEBRIS SHALL COMPLY WITH APPLICABLE CODES AND REGULATIONS COVERING THESE OPERATIONS. FEES SHALL BE PAID BY THE CONTRACTOR.
3. DEMOLITION AND REMOVAL OPERATIONS SHALL BE CONDUCTED IN AN EXPEDIENT MANNER, WITH PRECAUTIONS TAKEN TO PREVENT DEMOLITION SITE FROM BEING AN "ATTRACTIVE NUISANCE".
4. PERFORM REMOVAL WORK INDICATED ON DRAWINGS IN AN ORDERLY MANNER ACCORDING TO ACCEPTED CONSTRUCTION. PROTECT WORK SPECIFIED TO REMAIN. PROTECT ADJACENT AREAS FROM DAMAGE OR UNDUE DIRT AND DUST. WET DOWN DEBRIS OR RUBBISH, IF NECESSARY,TO MINIMIZE FLYING DUST.

CLEANING:

1. IN ADDITION TO REMOVAL OF RUBBISH AND LEAVING BUILDINGS "BROOM CLEAN"
   A. REPLACE BROKEN GLASS
   B. REMOVE PAINT SPOTS AND SMEARS,STAINS,MARKS,AND DIRT TO PROVIDE CLEAN SURFACE.
   C. CLEAN GLASS, HARDWARE, FIXTURES, CASEWORK, AND EQUIPMENT.
   D. WASH CONCRETE SURFACES,TILE FLOORS, TILE WALLS AND ANY OTHER IMPERVIOUS FLOOR AND WALL SURFACES.

EXISTING CONDITIONS:

1. EXISTING WORK NOT SPECIFIED FOR REMOVAL THAT IS TEMPORARILY REMOVED, DAMAGED, EXPOSED, OR IN ANY WAY DISTURBED OR ALTERED BY REMOVAL WORK SHALL BE REPAIRED, PATCHED, OR REPLACED.
2. PROVIDE BARRIERS AND WARNING DEVICES TO PROTECT THE PUBLIC AND USERS OF ADJACENT FACILITIES.
3. INSPECT EXISTING CONDITIONS OF THE WORK, INCLUDING ELEMENTS SUBJECT TO DAMAGE OR TO MOVEMENT DURING CUTTING AND PATCHING. AFTER UNCOVERING WORK, INSPECT CONDITIONS AFFECTING INSTALLATION OF PRODUCTS OR PERFORMANCE OF WORK.
4. REPORT UNSATISFACTORY OR QUESTIONABLE CONDITIONS TO A/E IMMEDIATELY. DO NOT PROCEED WITH THE WORK UNTIL A/E HAS EVALUATED AND PROVIDED FURTHER INSTRUCTIONS.
5. PROVIDE ADEQUATE TEMPORARY SUPPORT AS NECESSARY TO ENSURE STRUCTURAL INTEGRITY OF THE WORK.
6. THE CONTRACTOR SHALL PROVIDE DEVICES AND METHODS TO PROTECT OTHER PORTIONS OF THE WORK FROM DAMAGE. PROVIDE PROTECTION FROM ELEMENTS FOR PORTIONS OF THE WORK EXPOSED BY CUTTING AND PATCHING WORK. EXECUTE CUTTING AND DEMOLITION BY METHODS PREVENTING DAMAGE TO OTHER WORK AND
7. PROVIDING PROPER SURFACES TO RECEIVE INSTALLATION OF NEW WORK.
8. REFINISH ENTIRE SURFACES AS NECESSARY TO PROVIDE AN EVEN FINISH TO MATCH ADJACENT FINISHES: EXECUTE FITTING AND ADJUSTMENT OF PRODUCTS TO PROVIDE A FINISHED INSTALLATION TO COMPLY WITH SPECIFIED PRODUCTS, FUNCTIONS, TOLERANCES, AND FINISHES.

EXISTING WORK MAY BE CUT, ALTERED, REMOVED, OR TEMPORARILY REMOVED AND REPLACED AS NECESSARY FOR THE PERFORMANCE OF WORK REQUIRED. EXCEPTION: UNLESS OTHERWISE INDICATED ON DRAWINGS, DO NOT CUT OR ALTER STRUCTURAL MEMBERS WITHOUT AUTHORIZATION BY THE A/E.

THE CONTRACTOR SHALL COVER OR FILL ALL HOLES AND OTHER HAZARDOUS OPENINGS CREATED BY REMOVAL WORK.

RESTORE DAMAGED OR DEFACED AREAS OR ITEMS, REMAINING IN PLACE, OF WORK PERFORMED UNDER THIS CONTRACT TO COMPARABLE CONDITIONS EXISTING BEFORE THE WORK.

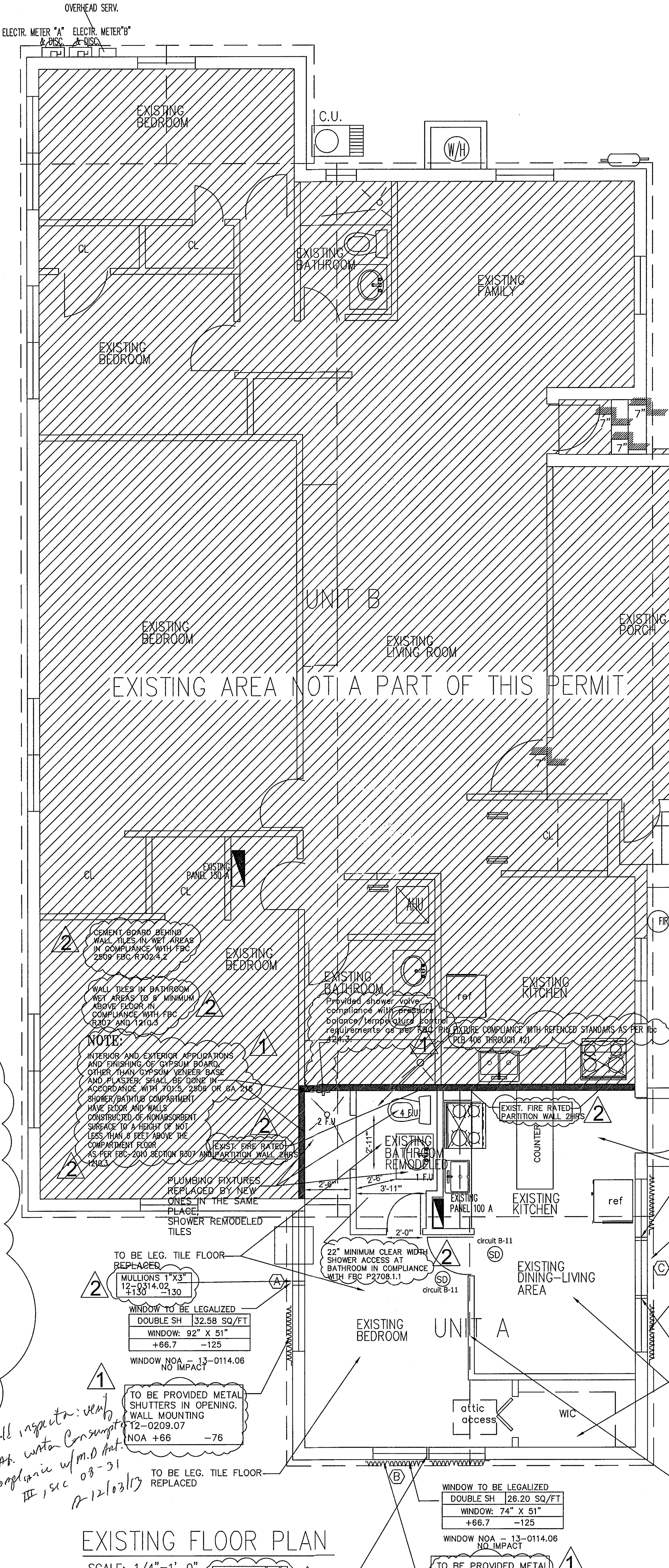

Field inspector: verify max. water consumption compliance w/ M.D. Art. III, sec 08-31
12/03/13

EXISTING FLOOR PLAN

SCALE: 1/4"=1'-0"

MULLIONS 1"X3" 12–0314.02 +130 –130

252 SF (11.17%)
LEVEL 2
ALTERATION–SECTION 404 – 2010 FBC

TOTAL WORK AREA=252 SQF

ALL WORK COMPLY WITH F.B.C. 2010.

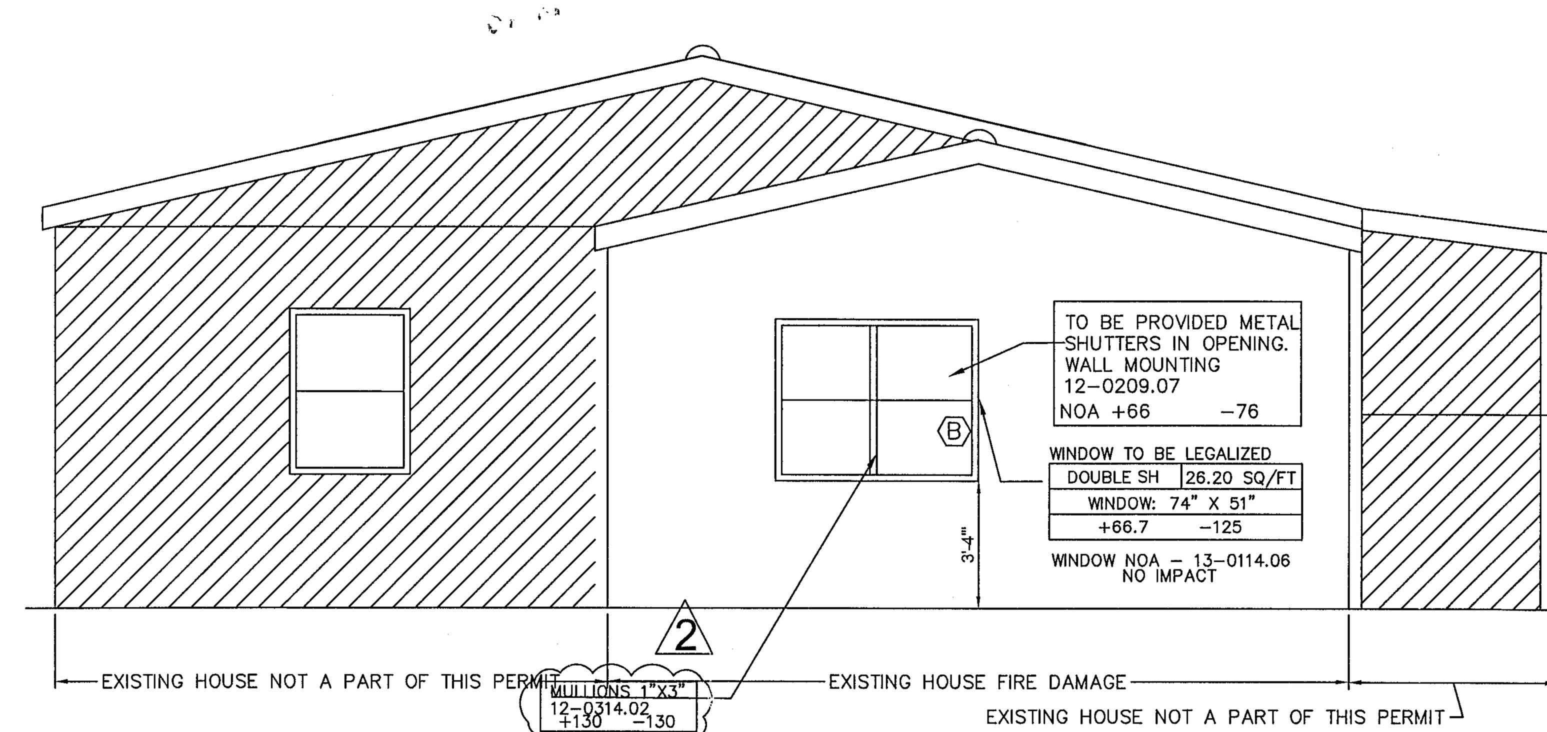

FRONT ELEVATION

SCALE: 1/4"=1'-0"

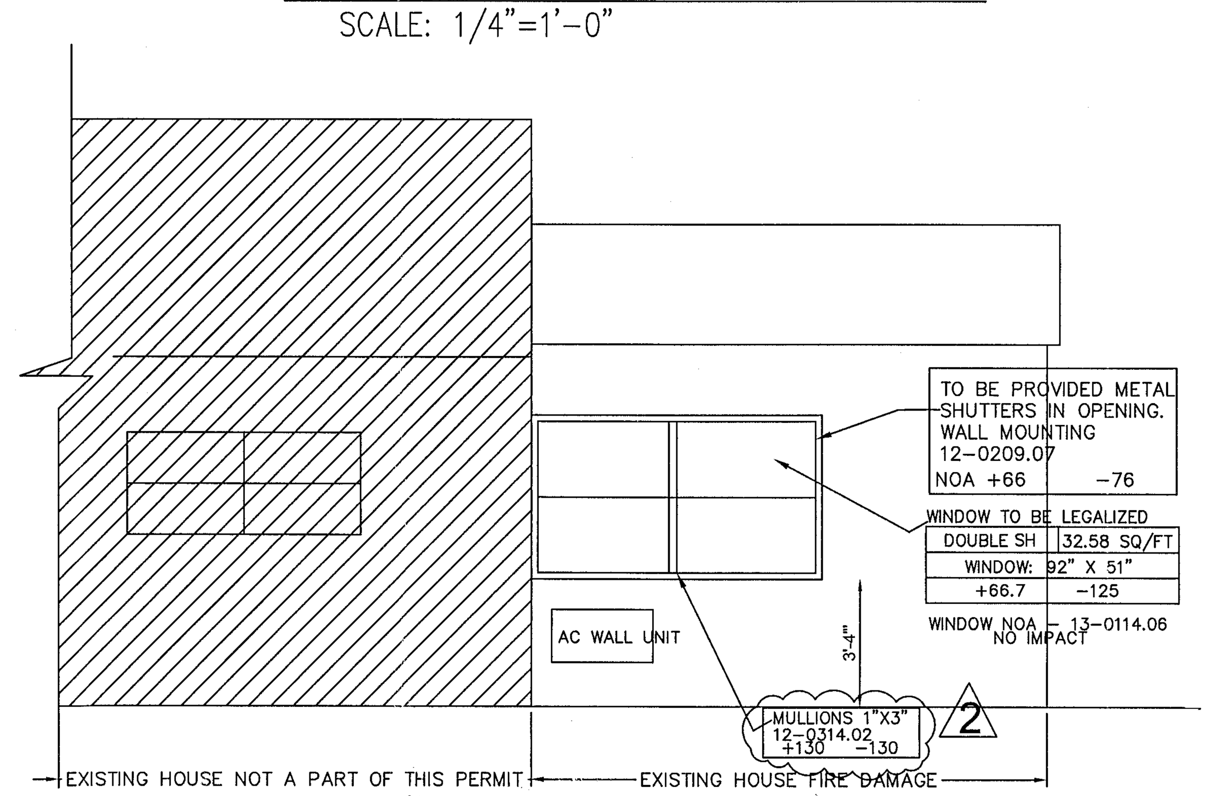

LEFT ELEVATION

SCALE: 1/4"=1'-0"

NEW SMOKE DETECTORS INSIDE AND OUTSIDE THE BEDROOMS.
–SMOKE DETECTOR WITH BATTERY PACK
BEDROOMS ARC–FAULT CIRCUIT BRANCH

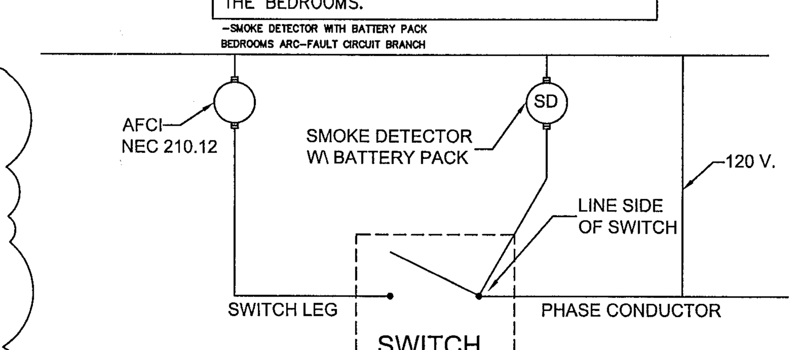

SMOKE DETECTOR CONNECTION DETAIL

WALL HUNG PLUMBING FIXTURE NOTE:

R4411.4.5.1.1 STEEL STUDS SUPPORTING WALL HUNG PLUMBING FIXTURES SHALL BE DOUBLED OR NOT LESS THAN 20 GAUGE WITH A MINIMUM EFFECTIVE MOMENT OF INERTIA EQUAL TO 0.864 INCH4 (360 M4).

R4409.5.1.15 WALL HUNG FIXTURES. STUDS IN BEARING WALLS, EXTERIOR WALLS AND NONBEARING PARTITIONS SUPPORTING WALL HUNG PLUMBING FIXTURES AND WALL CABINETS SHALL BE NOT LESS THAN 2X4, WHERE SPACED NOT MORE THAN 16 INCHES (406 MM) ON CENTER OR, NOT LESS THAN 2X6, WHERE SPACED NOT MORE THAN 24 INCHES (610 MM) ON CENTER.

UL DESING No. U495

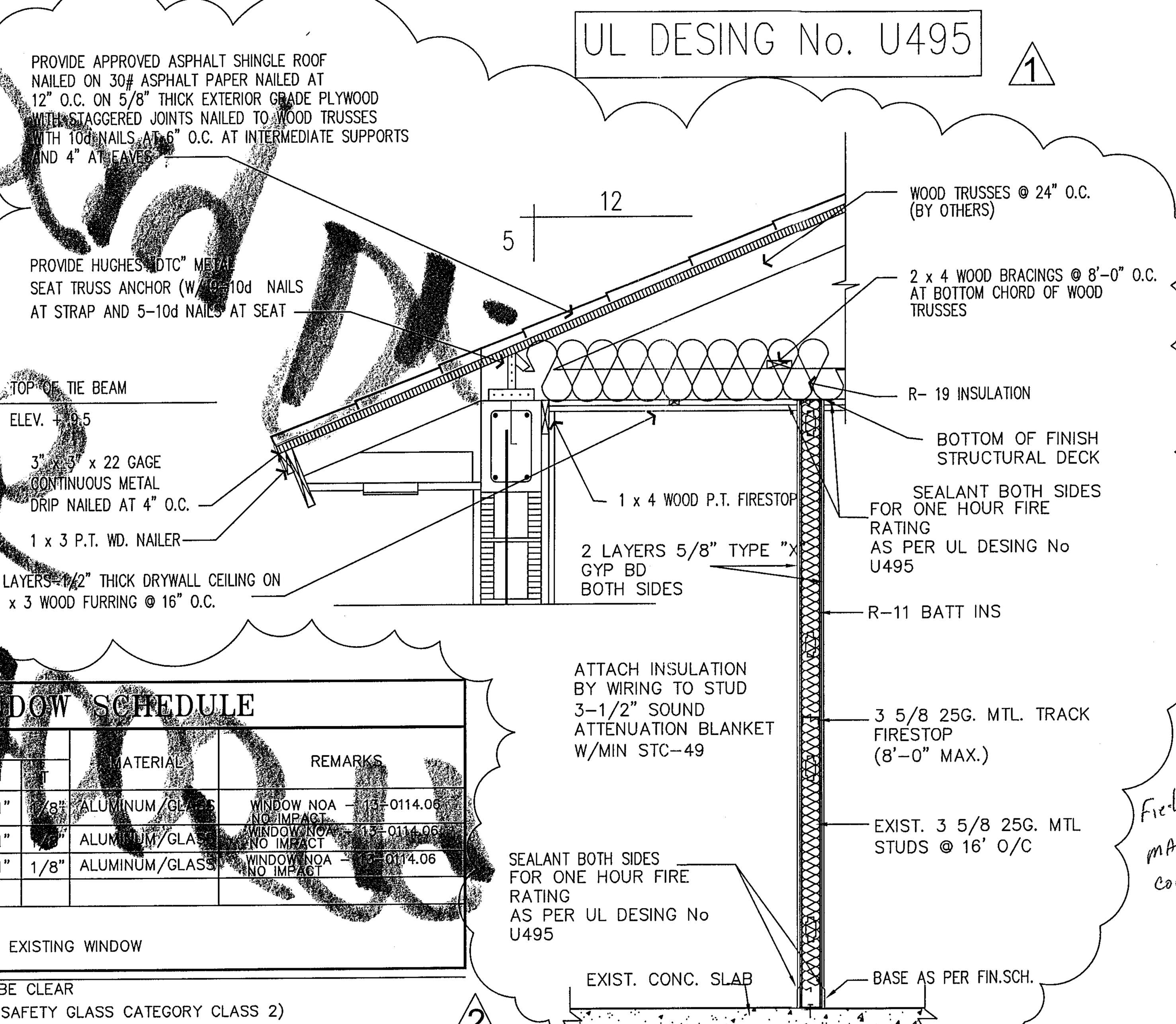

TWO HOURS WALL CONSTRUCTION

SCALE: N.T.S.

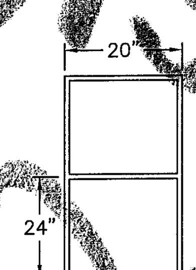

WINDOW SCHEDULE

MARK	DESCRIPTION	SIZE W	SIZE H	SIZE T	MATERIAL	REMARKS
A	D–SH	92"	51"	1/8"	ALUMINUM/GLASS	WINDOW NOA – 13–0114.06 NO IMPACT
B	D–SH	74"	51"	1/8"	ALUMINUM/GLASS	WINDOW NOA – 13–0114.06 NO IMPACT
C	T–SH	113"	51"	1/8"	ALUMINUM/GLASS	WINDOW NOA – 13–0114.06 NO IMPACT
E	EXISTING WINDOW					

NOTES:
1– ALL GLASS SHALL BE CLEAR
2– TEMPERED GLASS (SAFETY GLASS CATEGORY CLASS 2)
3– EGRESS TYPE
4– SH (SINGLE HUNG)
EGRESS WINDOW AS SECOND MEANS OF ESCAPE TO HAVE AN OUTSIDE WINDOW OR DOOR OPERABLE FROM THE INSIDE WITHOUT THE USE OF TOOLS AND PROVIDING A CLEAR OPENING OF NOT LESS THAN 20 IN. IN WIDTH, 24 IN. IN HEIGHT AND 5.7 SQ.FT. IN AREA.

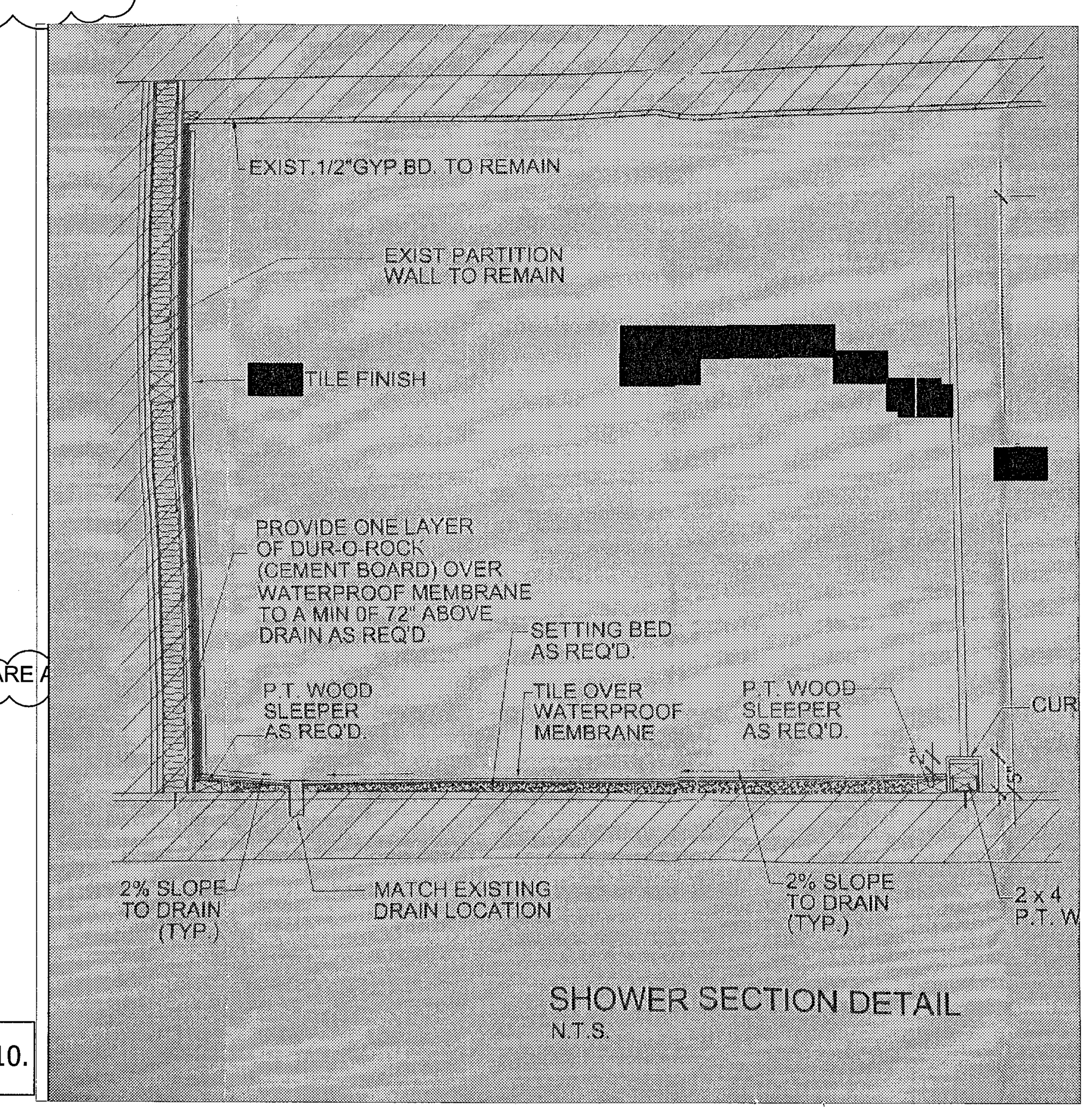

SHOWER SECTION DETAIL
N.T.S.

NO.	REVISIONS
1	REVISION 11–11–2013
2	REVISION 11–25–2013
3	

EMILIANO OROZCO
PE66341
817 SW 122 AVE
MIAMI , FL, 33184
PHONE: (786)-715-7125

PROJECT:
FIRE REPAIR DONE WITHOUT PERMIT TO BE LEG.

OWNER INFORMATION:
ANA MARIA OLIN/JIMMY CARRILLO

ADDRESS:
2125 BAY DRIVE, APT. "A"
MIAMI BEACH, FL 33141

SHEET TITLE
FLOOR PLAN AND DETAILS

SEAL

DATE 10-01-2013
SCALE AS SHOWN
DESIGNED
DRAWN BEST PLANS SERVICES,
CHECKED
DRAWING NO. A-2

B14000599
M25
Bay Dr.

SCOPE OF WORK

GET PERMIT FOR INTERIOR REMODELING DONE DUE FIRE :
CASE NUMBER BV09001124

(1) BUILDING:
- TO BE LEG. WINDOWS INSTALLED WITHOUT PERMIT.
- TO BE PROVIDED NEW SHUTTERS FOR THE WINDOWS.
- TO BE LEG. TILE FLOOR.
- TO BE LEG. BATHROOM REMODELED.

(2) ELECTRICAL:
- TO BE PROVIDED SMOKE DETECTOR.

NOTE

NO STRUCTURAL AND NO MECHANICAL WORKS TO BE PERFORMED.

NO PIPPINS WERE AFFECTED WITH THE REMODELING

ALTERATION LEVEL

SECTION 404 ALTERATION-LEVEL 2

404.1 SCOPE. LEVEL 2 ALTERATIONS INCLUDE THE RECONFIGURATION OF SPACE, THE ADDITION OR ELIMINATION OF ANY DOOR OR WINDOW, THE RECONFIGURATION OR EXTENSION OF ANY SYSTEM, OR THE INSTALLATION OF ANY ADDITIONAL EQUIPMENT.

404.2 APPLICATION. LEVEL 2 ALTERATIONS SHALL COMPLY WITH THE PROVISIONS OF CHAPTER 6 FOR LEVEL 1 ALTERATIONS AS WELL AS THE PROVISIONS OF CHAPTER 7.

DEMOLITION NOTE:

1- CONSULT WITH OWNER BEFORE PRIOR COMMENCEMENT OF DEMOLITION WORK.
2- ALL DEMOLITION WORK SHALL BE COORDINATED WITH PLUMBING AND ELECTRICAL PLANS STRICTLY.
3- ALL ELECTRICAL, PLUMBING & MECHANICAL DUCTS OR PIPES AFFECTED SHALL BE REINSTALLED SAME WAY AS IT WAS.

ALL WORK COMPLY WITH F.B.C. 2010.

MATERIALS REMOVED:
REMOVED REGULAR TILES ON FLOOR.
REMOVED SOME DRYWALL .
REMOVED PLUMBING FIXTURES

ZONING CLASS: MULTI FAMILY 3900 (1)
PROPOSED USE: RESIDENTIAL
OCCUPANCY GROUP: RESIDENTIAL
LOT AREA: 7,789 SQ FT

DEMOLITION:

1. ORGANIZE AND PERFORM DEMOLITION WORK TO AVOID DAMAGE TO CONSTRUCTION INTENDED TO REMAIN.
2. DEMOLITION AND TRANSPORTATION OF DEBRIS SHALL COMPLY WITH APPLICABLE CODES AND REGULATIONS COVERING THESE OPERATIONS. FEES SHALL BE PAID BY THE CONTRACTOR.
3. DEMOLITION AND REMOVAL OPERATIONS SHALL BE CONDUCTED IN AN EXPEDIENT MANNER, WITH PRECAUTIONS TAKEN TO PREVENT DEMOLITION SITE FROM BEING AN "ATTRACTIVE NUISANCE".
4. PERFORM REMOVAL WORK INDICATED ON DRAWINGS IN AN ORDERLY MANNER ACCORDING TO ACCEPTED CONSTRUCTION. PROTECT WORK SPECIFIED TO REMAIN. PROTECT ADJACENT AREAS FROM DAMAGE OR UNDUE DIRT AND DUST. WET DOWN DEBRIS OR RUBBISH, IF NECESSARY,TO MINIMIZE FLYING DUST.

CLEANING:

1. IN ADDITION TO REMOVAL OF RUBBISH AND LEAVING BUILDINGS "BROOM CLEAN"
   A. REPLACE BROKEN GLASS
   B. REMOVE PAINT SPOTS AND SMEARS,STAINS,MARKS,AND DIRT TO PROVIDE CLEAN SURFACE.
   C. CLEAN GLASS, HARDWARE, FIXTURES, CASEWORK, AND EQUIPMENT.
   D. WASH CONCRETE SURFACES,TILE FLOORS, TILE WALLS AND ANY OTHER IMPERVIOUS FLOOR AND WALL SURFACES.

EXISTING CONDITIONS:

1. EXISTING WORK NOT SPECIFIED FOR REMOVAL THAT IS TEMPORARILY REMOVED, DAMAGED, EXPOSED, OR IN ANY WAY DISTURBED OR ALTERED BY REMOVAL WORK SHALL BE REPAIRED, PATCHED, OR REPLACED.
2. PROVIDE BARRIERS AND WARNING DEVICES TO PROTECT THE PUBLIC AND USERS OF ADJACENT FACILITIES.
3. INSPECT EXISTING CONDITIONS OF THE WORK, INCLUDING ELEMENTS SUBJECT TO DAMAGE OR TO MOVEMENT DURING CUTTING AND PATCHING. AFTER UNCOVERING WORK, INSPECT CONDITIONS AFFECTING INSTALLATION OF PRODUCTS OR PERFORMANCE OF WORK.
4. REPORT UNSATISFACTORY OR QUESTIONABLE CONDITIONS TO A/E IMMEDIATELY. DO NOT PROCEED WITH THE WORK UNTIL A/E HAS EVALUATED AND PROVIDED FURTHER INSTRUCTIONS.
5. PROVIDE ADEQUATE TEMPORARY SUPPORT AS NECESSARY TO ENSURE STRUCTURAL INTEGRITY OF THE WORK.
6. THE CONTRACTOR SHALL PROVIDE DEVICES AND METHODS TO PROTECT OTHER PORTIONS OF THE WORK FROM DAMAGE. PROVIDE PROTECTION FROM ELEMENTS FOR PORTIONS OF THE WORK EXPOSED BY CUTTING AND PATCHING WORK. EXECUTE CUTTING AND DEMOLITION BY METHODS PREVENTING DAMAGE TO OTHER WORK AND
7. PROVIDING PROPER SURFACES TO RECEIVE INSTALLATION OF NEW WORK.
8. REFINISH ENTIRE SURFACES AS NECESSARY TO PROVIDE AN EVEN FINISH TO MATCH ADJACENT FINISHES: EXECUTE FITTING AND ADJUSTMENT OF PRODUCTS TO PROVIDE A FINISHED INSTALLATION TO COMPLY WITH SPECIFIED PRODUCTS, FUNCTIONS, TOLERANCES, AND FINISHES.

EXISTING WORK MAY BE CUT, ALTERED, REMOVED, OR TEMPORARILY REMOVED AND REPLACED AS NECESSARY FOR THE PERFORMANCE OF WORK REQUIRED. EXCEPTION: UNLESS OTHERWISE INDICATED ON DRAWINGS, DO NOT CUT OR ALTER STRUCTURAL MEMBERS WITHOUT AUTHORIZATION BY THE A/E.

THE CONTRACTOR SHALL COVER OR FILL ALL HOLES AND OTHER HAZARDOUS OPENINGS CREATED BY REMOVAL WORK.

RESTORE DAMAGED OR DEFACED AREAS OR ITEMS, REMAINING IN PLACE, OF WORK PERFORMED UNDER THIS CONTRACT TO COMPARABLE CONDITIONS EXISTING BEFORE THE WORK.

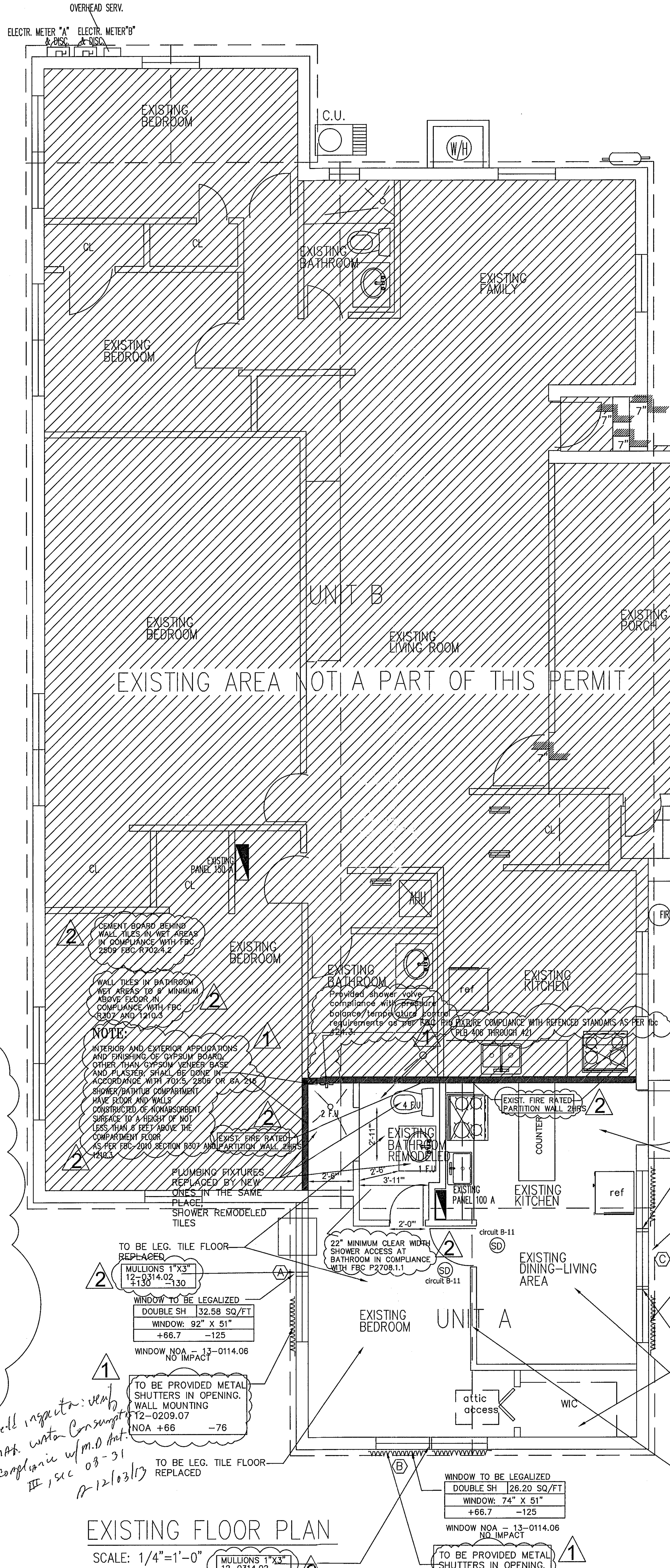

EXISTING FLOOR PLAN

SCALE: 1/4"=1'-0"

252 SF (11.17%) LEVEL 2 ALTERATION-SECTION 404 - 2010 FBC

TOTAL WORK AREA=252 SQF

ALL WORK COMPLY WITH F.B.C. 2010.

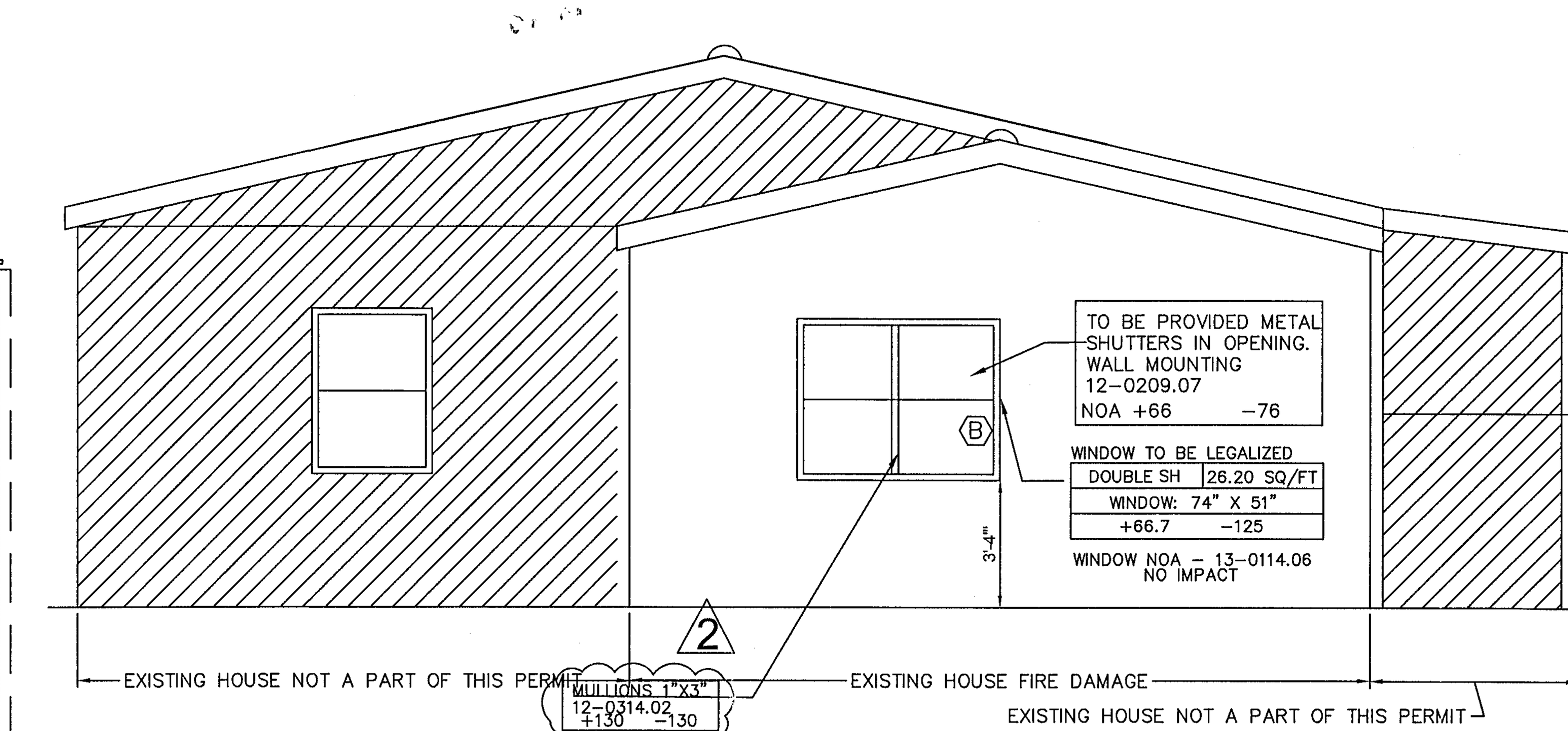

FRONT ELEVATION

SCALE: 1/4"=1'-0"

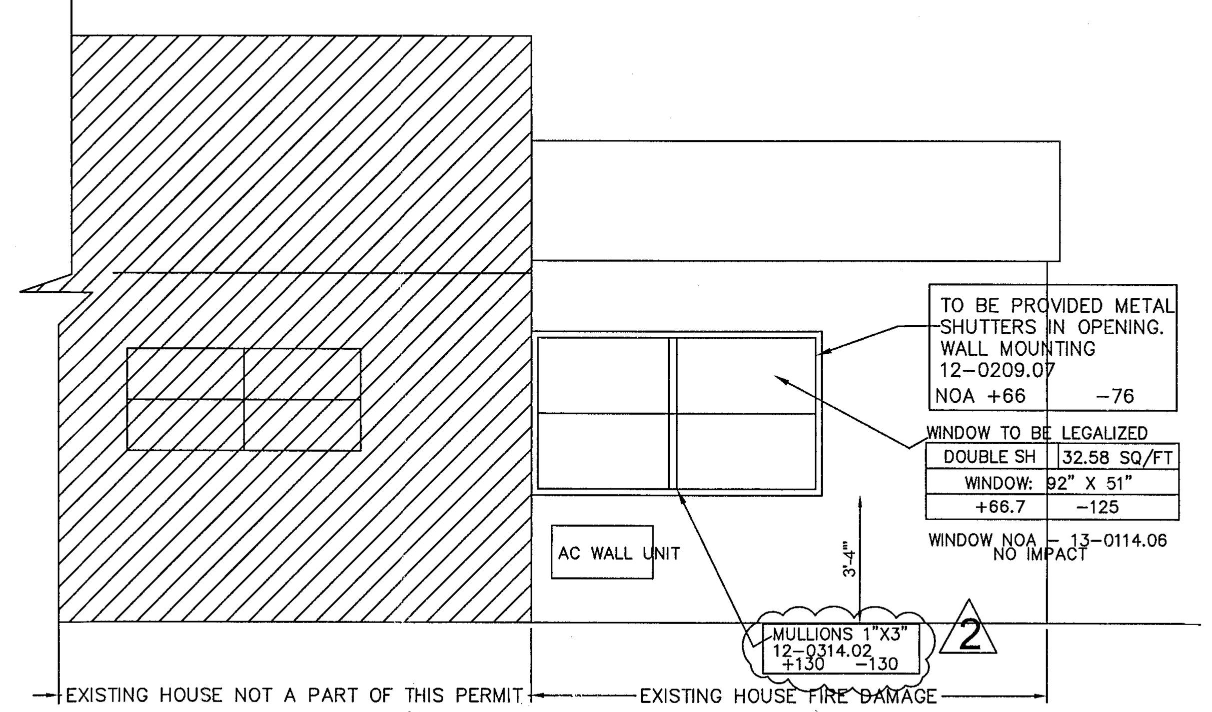

LEFT ELEVATION

SCALE: 1/4"=1'-0"

WALL HUNG PLUMBING FIXTURE NOTE:

R4411.4.5.1.1 STEEL STUDS SUPPORTING WALL HUNG PLUMBING FIXTURES SHALL BE DOUBLED OR NOT LESS THAN 20 GAUGE WITH A MINIMUM EFFECTIVE MOMENT OF INERTIA EQUAL TO 0.864 INCH4 (360 M4).

R4409.5.1.15 WALL HUNG FIXTURES. STUDS IN BEARING WALLS, EXTERIOR WALLS AND NONBEARING PARTITIONS SUPPORTING WALL HUNG PLUMBING FIXTURES AND WALL CABINETS SHALL BE NOT LESS THAN 2X4, WHERE SPACED NOT MORE THAN 16 INCHES (406 MM) ON CENTER OR, NOT LESS THAN 2X6, WHERE SPACED NOT MORE THAN 24 INCHES (610 MM) ON CENTER.

NEW SMOKE DETECTORS INSIDE AND OUTSIDE THE BEDROOMS.
-SMOKE DETECTOR WITH BATTERY PACK
BEDROOMS ARC-FAULT CIRCUIT BRANCH

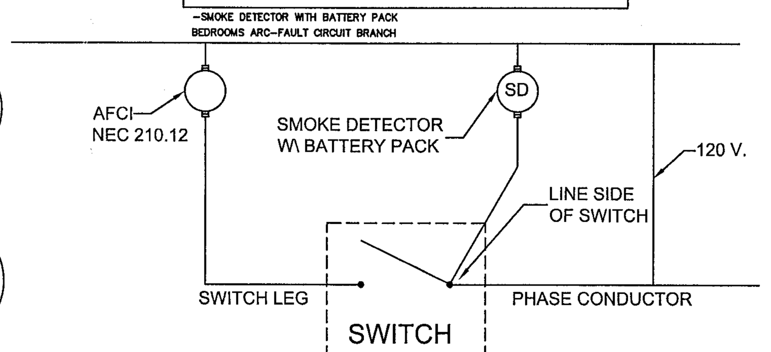

SMOKE DETECTOR CONNECTION DETAIL

UL DESING No. U495

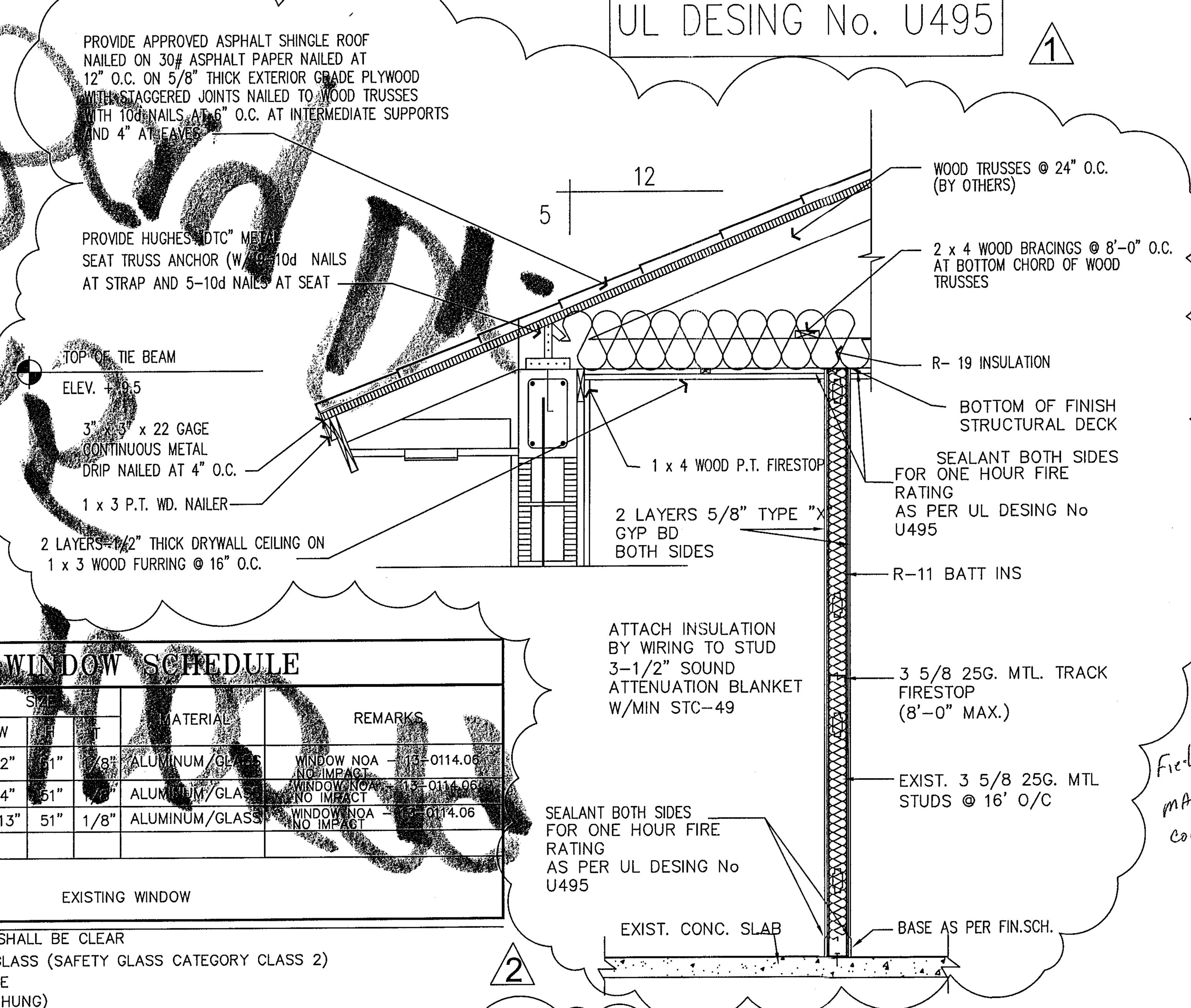

TWO HOURS WALL CONSTRUCTION

SCALE: N.T.S.

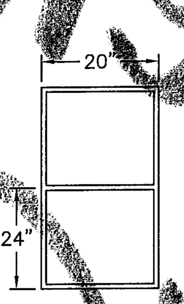

WINDOW SCHEDULE

MARK	DESCRIPTION	SIZE W	SIZE H	SIZE T	MATERIAL	REMARKS
(A)	D-SH	92"	51"	1/8"	ALUMINUM/GLASS	WINDOW NOA - 13-0114.06 NO IMPACT
(B)	D-SH	74"	51"	1/8"	ALUMINUM/GLASS	WINDOW NOA - 13-0114.06 NO IMPACT
(C)	T-SH	113"	51"	1/8"	ALUMINUM/GLASS	WINDOW NOA - 13-0114.06 NO IMPACT
(E)	EXISTING WINDOW					

NOTES:
1- ALL GLASS SHALL BE CLEAR
2- TEMPERED GLASS (SAFETY GLASS CATEGORY CLASS 2)
3- EGRESS TYPE
4- SH (SINGLE HUNG)
EGRESS WINDOW AS SECOND MEANS OF ESCAPE TO HAVE AN OUTSIDE WINDOW OR DOOR OPERABLE FROM THE INSIDE WITHOUT THE USE OF TOOLS AND PROVIDING A CLEAR OPENING OF NOT LESS THAN 20 IN. IN WIDTH, 24 IN. IN HEIGHT AND 5.7 SQ.FT. IN AREA.

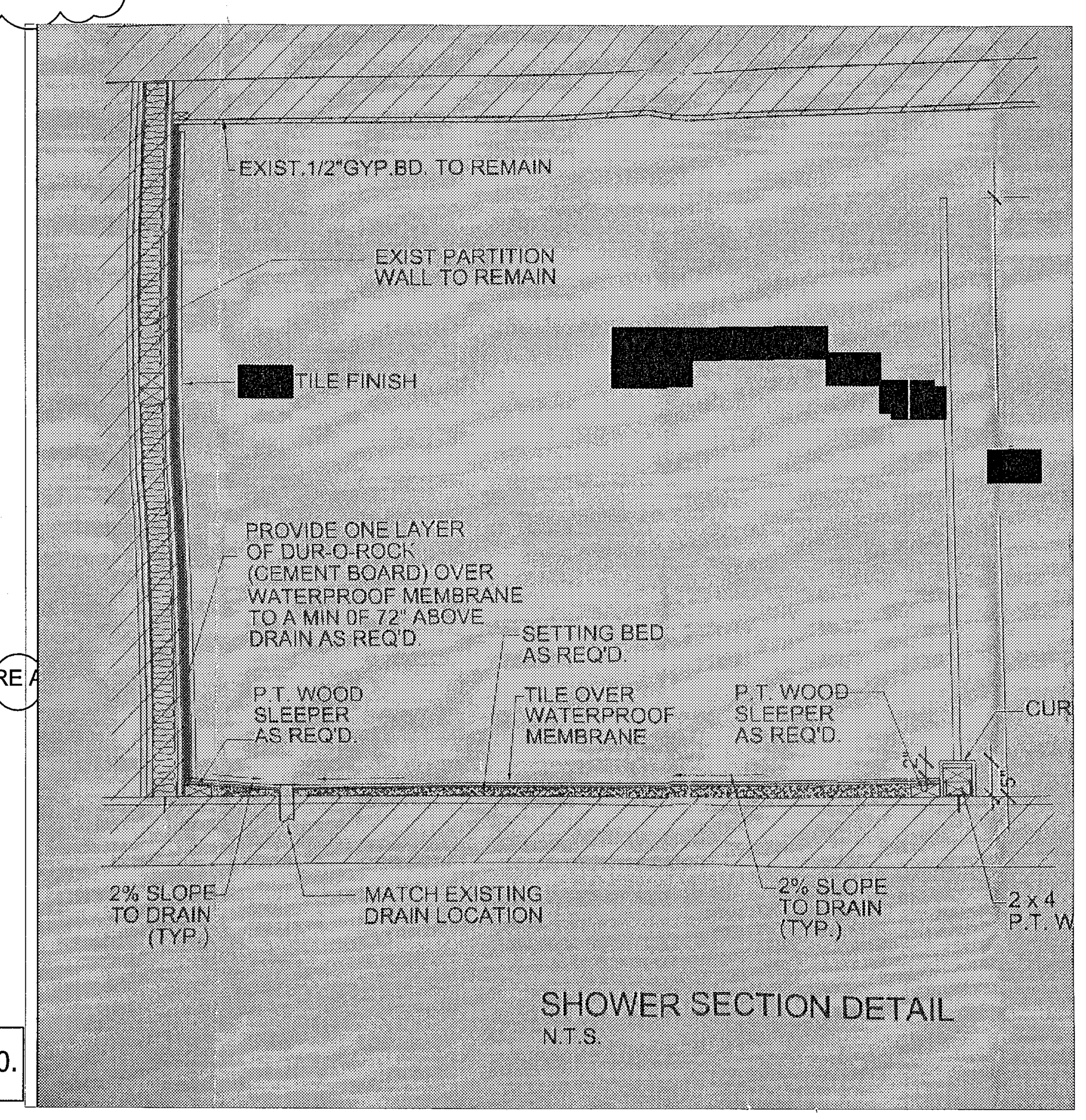

SHOWER SECTION DETAIL
N.T.S.

NO.	REVISIONS
1	REVISION 11-11-2013
2	REVISION 11-25-2013
3	

EMILIANO OROZCO
PE66341
817 SW 122 AVE
MIAMI , FL, 33184
PHONE: (786)-715-7125

PROJECT: FIRE REPAIR DONE WITHOUT PERMIT TO BE LEG.

OWNER INFORMATION: ANA MARIA OLIN/JIMMY CARRILLO

ADDRESS: 2125 BAY DRIVE, APT. "A" MIAMI BEACH, FL 33141

SHEET TITLE: FLOOR PLAN AND DETAILS

SEAL

DATE 10-01-2013

SCALE AS SHOWN

DESIGNED

DRAWN BEST PLANS SERVICES,

CHECKED

DRAWING NO. A-2

Elizabeth Dougherty (owner)

Owner Riesen Engineering Co. Mailing Address | Permit No. 14093 | Date May 22-1940

Lot 8 | Block 41 | Subdivision Normandy Island | Address 2125 and 2127 Bay Drive

General Contractor Riesen Engineering Company | Address BOND 2385 | 3210-11-0730

Architect J. Edwin Petersen | 26158 | Address | (3 units)

Front 34 | Depth 62' | Height 16 | Stories 1 | Use DUPLEX - 7 rms and 2-car garage

Type of construction c-b-s | Cost $ 6,000.00 | Foundation spread footing | Roof Tile

---

Plumbing Contractor Odom & Robertson # 13549 | Address | Date June 5-1940

Plumbing Fixtures 2 water closets- 2 lavatories- 2 bath tubs - 1 laundry tub - 2 sinks - 4 gas | Rough approved by BELL -7-26-1940 | Date - June 5-1940

Gas Stoves

Gas Heaters | Address | Date

Final approved by # 13726 | Date

Sewer connection | Septic tank 1- 470 gals | 100' drain tile Make C. Pittard | Date 7-10-1940

Electrical Contractor Griffin Electric # 15149 | Address | Date June 25-1940

OUTLETS Switch 18 | Range | Motors | Fans | Temporary service - 7-18-1940 "# 15278 Griffin

Light 19 | HEATERS Water 1

Receptacles 25 | Space | Centers of Distribution 2

Refrigerators 2 | Irons 2

Electrical Contractor | Address | Date

No. fixtures set 22 | Final approved by Lincoln Brown, jr. | Date

Date of service March 12-1941

Alterations or repairs PLUMBING PERMIT: # 19705- Orr- 1 sewer-------- | Date 5-16-46

Frank Martin: BUILDING PERMIT # 24351 Remodeling old garage into enclosed porch' $ 400... Apr. 25,1947
T. Hunter Henderson, architect: Owner builds.

Frank Martin: BUILDING PERMIT # 25537 New kitchen, new door, new bath,-all inside work--making an apt.-building still having a duplex - T. Hunter Henderson, architect: Frank A. Martin, contractor: $ 750.....Oct. 7, 1947

Over

iS

Building Permits: #65253 Appliance Consumer Service: install one 1HP window unit air cond. $200 - 7/5/6
#65538 Luma-Vent: Replace existing windows with awning type - $420. - 8/3/61
#09911-Pierce, Inc.-Fumigation-$500-10-4-76

$ #14043-Peele Roofing-Re-roof 21 sqs-$1000-10-19-78

Plumbing Permits:
#80267 Pablo Aguilera: Exterior painting - $350 - 5/15/68 OK HW 6/6/68

Electrical Permits:# 24983 Emanuel Electric: 2 switch outlets, 3 light outlets, 4 receptacles,
11-18-47 WOODMANSEE O.K. 3 fixtures, 1 refrigerator outlet, 1 iron outlet, 2 centers of distribution-
Oct. 16, 1947
#69176 - RC Elect. - 3 water heater outlets - 3 refrigerator outlets - 3 motors 0-1 AC
4 meter change - service 100 amp 10/13/71

#75444-Luzer Electric- 200 amps service, 3 meters service repair/meter change-4-20-79

7

PERMIT #	COMP_TYPE	SUB_TYPE	APPLIED	APPROVED	EXPIRED	STATUS	DESCRIPTION	STREET_NO	TREET_DIRECTIO	STREET_NAME	PARCEL_NO
BA903694	AUTOPROJ	OTH	27-Feb-90			CLOSED	ANNUAL FIRE INSPECTION	2125		BAY DR	32100110730
BM50000244	BMISC		27-Oct-99			VOID	BOND FOR B0000313	2125		BAY DR	32100110730
BM51302299	BMISC	DOC HIST	30-Apr-13			CLOSED	CD.	2125		BAY DR	32100110730
BM51601578	BMISC	DOC HIST	24-Mar-16			APPLIED	2 MF and $50 inspection plan	2125		BAY DR	32100110730
BP070034	BPLUM	ALTRMDL	04-Oct-06	04-Oct-06	23-Apr-07	FINAL	Repair main sanitary sewer line.	2125		BAY DR	32100110730
B0000313	BSBUILD		27-Oct-99	27-Oct-99	20-Jun-00	FINAL	RE-ROOF TILE TO TILE	2125		BAY DR	32100110730
BE160376	BSUBELEC	ALTRMDL	10-Nov-15	09-Dec-15	06-Jun-16	FINAL	B1406138/Electrical as per master	2125		BAY DR	32100110730
BP160294	BSUBPLUM	ALTRMDL	10-Nov-15	09-Dec-15	06-Jun-16	FINAL	B1406138/New bathroom remodeling	2125		BAY DR	32100110730
B1400599	BUILD	ALTRMD-R	01-Nov-13	07-Mar-14	03-Sep-14	CLOSED	INT REMODELING TO INCLUDE NEW NON IMPACT 2 WINOWS,NEW FLOOR,INTERIOR FLOOR,NEW BATHROOM REMODELING TO CORRECT VIOLATION BV09001124	2125		BAY DR	32100110730
B1406138	BUILD	ALTRMD-R	09-Sep-14	13-Nov-14	12-Jun-16	FINAL	Renew B1400599/ INT REMODELING TO INCLUDE NEW NON IMPACT 2 WINOWS,NEW FLOOR,INTERIOR FLOOR,NEW BATHROOM REMODELING TO CORRECT VIOLATION BV09001124	2125		BAY DR	32100110730
BV14000846	BVIO	PLUMB	22-May-14	22-May-14	04-Jun-14	CLOSED	Install L P gas line not to code, Gas tank & line installed without permits.	2125		BAY DR	32100110730
BV09001124	BVIO	STRUCT	19-Aug-09	19-Aug-09	13-Nov-14	CLOSED	NOTICE OF VIOLATION ISSUED. CONSTRUCTION WORK DONE WITHOUT PERMIT. AS PER CITY OF MIAMI BEACH RECORDS NO PERMIT WAS OBTIANED TO REPAIR DAMAGES CAUSE BY FIRE AT UNIT A THAT OCCURED ON 11/21/2007. NEW WINDOWS, NEW FLOOR, NEW BATHROOM NEED TO SUBMIT THE REQUIRED DOCUMENTS AND OBTAIN PERMIT IN ALL TRADES INVOLVED. DOUBLE FEES APPLIES.	2125		BAY DR	32100110730
BV14001398	BVIO	STRUCT	10-Sep-14	11-Sep-14	05-Dec-14	CLOSED	S.W.O. issued to property owner for permit B1400599 in suspended status. The violation will remain open until the C.O.C. is completed and the new permit is obtained.	2125		BAY DR	32100110730